TERAL

Vertical Multistage Centrifugal Pumps

ASVM Stainless steel AISI304 | ASVMN Stainless steel AISI316

ASVMG Cast iron & Stainless steel AISI304

50Hz

Since 1918

TERAL INC.

Advanced technology from Japan

Applications

Typical application of ASVM, ASVMN, ASVMG series pumps

■ WATER SUPPLY AND PRESSURE BOOSTING

Pressure boosting in buildings, hotels, residential complexes
Pressure booster stations, supply of water networks
Pressure boosting for industrial water supply

■ LIGHT INDUSTRY

Washing and cleaning systems
Car washing facilities
Fire fighting systems
Process water systems
Machine tools (cooling lubricants)

■ HEATING, VENTILATION AND AIR-CONDITIONING

Boilers
Induction heating
Heat exchangers
Cooling towers and systems
Temperature control systems

■ IRRIGATION AND AGRICULTURE

Greenhouses
Sprinkler irrigation
Field irrigation (flooding)

■ WATER TREATMENT

Water softeners and de-mineralization
Reverse Osmosis systems
Distillation systems
Filtration
Ultra-filtration systems

Identification Code

ASVM100B6/2-545 SQQV

ASVM	100	B	6	/2	5	45	SQQV

- SQQV — Shaft seal code
- 45 — Rated power [kW]
- 5 — Frequency [5:50Hz, 6:60Hz]
- /2 — Number of reduced-dia. impeller
- 6 — Number of stages
- B — Auxiliary code
- 100 — Nominal inlet/outlet [mm]
- ASVM — Type (ASVM, ASVMN or ASVMG)

Performance range

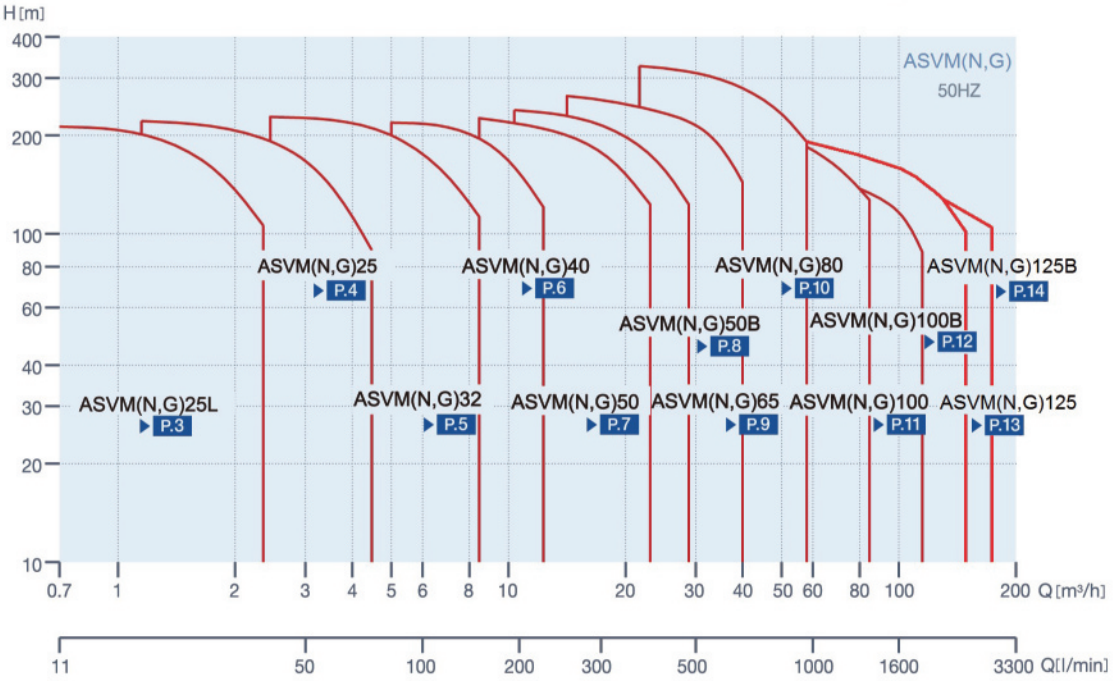

Standard specification

50Hz	ASVM, ASVMN, ASVMG											
	25L	25	32	40	50	50B	65	80	100	100B	125	125B
Nominal inlet /outlet [mm]	25	25	32	40	50	50	65	80	100	100	125	125
Nominal flow [m^3 /h]	1	3	5	10	15	20	32	45	64	90	120	150
Flow range [m^3 /h]	0.7-2.4	1.2-4.5	2.5-8.5	5-13	8.5-23.5	10.5-29	15-40	22-58	30-85	45-120	60-160	75-180
Max. pressure [bar]	21.5	23	24	21.5	23	24.3	27.5	33	21.8	20	20.4	18.7
Fluid temperature [℃]	-15 to +120											
Motor power [kW]	0.37-2.2	0.37-3	0.37-5.5	0.37-7.5	1.1-15	1.1-18.5	1.5-30	3-45	4-45	5.5-45	11-75	11-75
Material												
ASVM	Stainless steel EN 1.4301/AISI 304/SUS304											
ASVMN	Stainless steel EN 1.4401/AISI 316/SUS316											
ASVMG	Pump body: Stainless steel EN 1.4301/AISI 304/SUS304											
	Pump base: Cast iron EN-GJL-200/ASTM25B/FC200						Pump base: Cast iron EN-GJL-250/ASTM35B/FC250					
Motor												
Mains connection 1~[V/Hz] (Permissible voltage tolerance ± 10%)	220-240V 50Hz											
Mains connection 3~[V/Hz] (Permissible vottage tolerance ± 10%)	0.37-7.5kW 220-240/380-415V 50Hz From 11kW 380-415V 50Hz											
Insulation class	F											
Enclosure class	IP 55 (≤7.5kW) IP54 (≥11kW)											
Ambient temperature	50°C											
Pipe Connection												
Flange	DN 25/32	DN 25/32	DN 25/32	DN 40	DN 50	DN 50	DN 65	DN80	DN100	DN100	DN125	DN125
Shaft Seal												
Mechanical Seal	Cartridge type SiC/SiC + Viton (Seal code : SQQV)											

Maximum operating and inlet pressure

	Stages	Maximum Operating Pressure	Stages	Maximum Inlet Pressures	Flange pressure rating (PN)
ASVM, ASVMN, ASVMG 25L	2 - 36	25 bar	2 - 36	10 bar	PN 25
ASVM, ASVMN, ASVMG 25	2 - 36	25 bar	2 - 29	10 bar	PN 25
			31 - 36	15 bar	
ASVM, ASVMN, ASVMG 32	2 - 36	25 bar	2 - 16	10 bar	PN 25
			18 - 36	15 bar	
ASVM, ASVMN, ASVMG 40	1 - 16	16 bar	1 - 6	8 bar	PN 16
	17 - 22	25 bar	7 - 22	10 bar	PN 25
ASVM, ASVMN, ASVMG 50	1 - 10	16 bar	1 - 3	8 bar	PN 16
	12 - 17	25 bar	4 - 17	10 bar	PN 25
ASVM, ASVMN, ASVMG 50B	1 - 10	16 bar	1 - 3	8 bar	PN 16
	12 - 17	25 bar	4 - 17	10 bar	PN 25
ASVM, ASVMN, ASVMG 65	1/1 - 7	16 bar	1/1- 4	4 bar	PN 16
	8/2 - 14	30 bar	5/2 - 10	10 bar	PN 25/40
			11/2- 14	15 bar	
ASVM, ASVMN, ASVMG 80	1/1 - 5	16 bar	1/1 - 2	4 bar	PN 16
	6/2 - 11	30 bar	3/2	10 bar	PN 25/40
	12/2 - 13/2	33 bar	6/2 - 13/2	15 bar	PN 25/40
ASVM, ASVMN, ASVMG 100	1/1 - 5	16 bar	1/1 - 2/2	4 bar	PN 16
	6/2 - 8/1	30 bar	2/1 - 4/2	10 bar	PN 25/40
			4/1 - 8/1	15 bar	
ASVM, ASVMN, ASVMG 100B	1/1- 4	16 bar	1/1 - 1	4 bar	PN 16
	5/2 - 6	30 bar	2/1 - 3/2	10 bar	PN 25/40
			3 - 6	15 bar	
ASVM, ASVMN, ASVMG 125	1 - 7	30 bar	1 - 2/1	10 bar	PN 25/40
			2 - 5/1	15 bar	
			6/1 - 7	20 bar	
ASVM, ASVMN, ASVMG 125B	1/1 - 6	30 bar	1/1 - 1	10 bar	PN 25/40
			2/1 - 4/2	15 bar	
			5/2 - 6	20 bar	

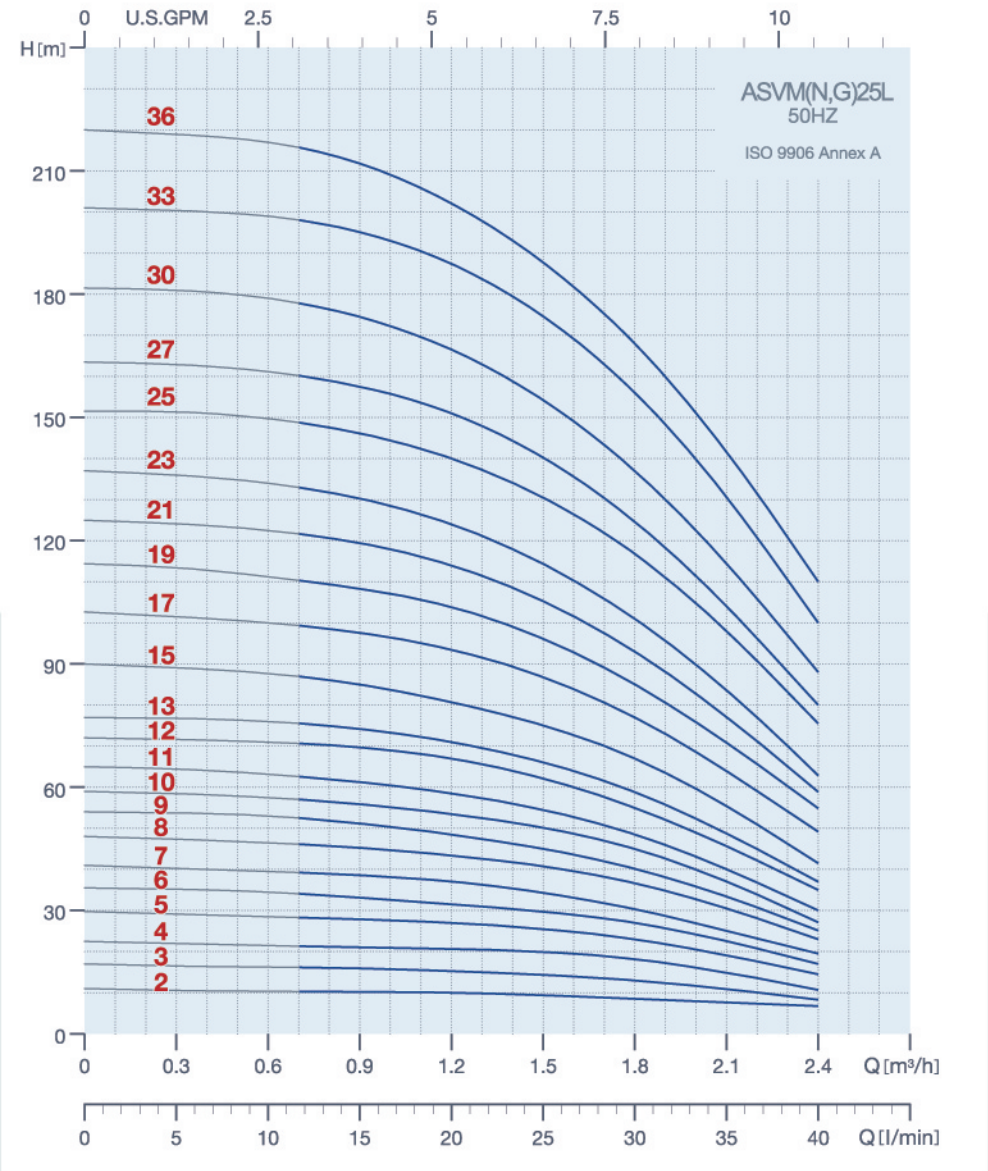

25L

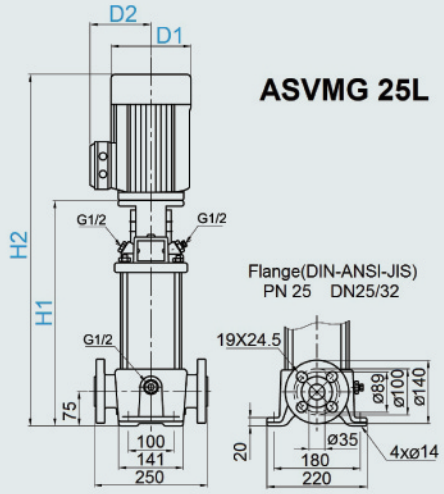

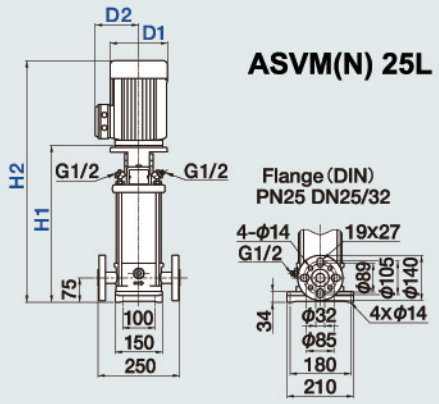

Dimensions and Weights

Model	P_2 [kW]	ASVM(N) , ASVMG		ASVM(N)		ASVMG		ASVM(N)	ASVMG
		D1	D2	H1	H2	H1	H2	Net Weight [Kg]	
		Dimension [mm]							
ASVM(N,G) 25L2-5.37	0.37	141	115	282	477	279	474	20	23
ASVM(N,G) 25L3-5.37	0.37	141	115	282	477	279	474	20	23
ASVM(N,G) 25L4-5.37	0.37	141	115	300	495	297	492	21	24
ASVM(N,G) 25L5-5.37	0.37	141	115	318	513	315	510	21	24
ASVM(N,G) 25L6-5.37	0.37	141	115	336	531	333	528	21	25
ASVM(N,G) 25L7-5.37	0.37	141	115	354	549	351	546	22	25
ASVM(N,G) 25L8-5.55	0.55	141	115	372	567	369	564	23	26
ASVM(N,G) 25L9-5.55	0.55	141	115	390	585	387	582	23	26
ASVM(N,G) 25L10-5.55	0.55	141	115	408	603	405	600	23	27
ASVM(N,G) 25L11-5.55	0.55	141	115	426	621	423	618	24	27
ASVM(N,G) 25L12-5.75	0.75	141	115	450	685	447	682	26	29
ASVM(N,G) 25L13-5.75	0.75	141	115	468	703	465	700	27	30
ASVM(N,G) 25L15-5.75	0.75	141	115	504	739	501	736	27	31
ASVM(N,G) 25L17-51.1	1.1	141	115	540	775	537	772	29	32
ASVM(N,G) 25L19-51.1	1.1	141	115	576	811	573	808	30	33
ASVM(N,G) 25L21-51.1	1.1	141	115	612	847	609	844	31	34
ASVM(N,G) 25L23-51.1	1.1	141	115	648	883	645	880	31	35
ASVM(N,G) 25L25-51.5	1.5	177	141	700	991	697	988	41	44
ASVM(N,G) 25L27-51.5	1.5	177	141	736	1027	733	1024	42	45
ASVM(N,G) 25L30-51.5	1.5	177	141	790	1081	787	1078	43	46
ASVM(N,G) 25L33-52.2	2.2	177	141	844	1135	841	1132	47	50
ASVM(N,G) 25L36-52.2	2.2	177	141	898	1189	895	1186	48	51

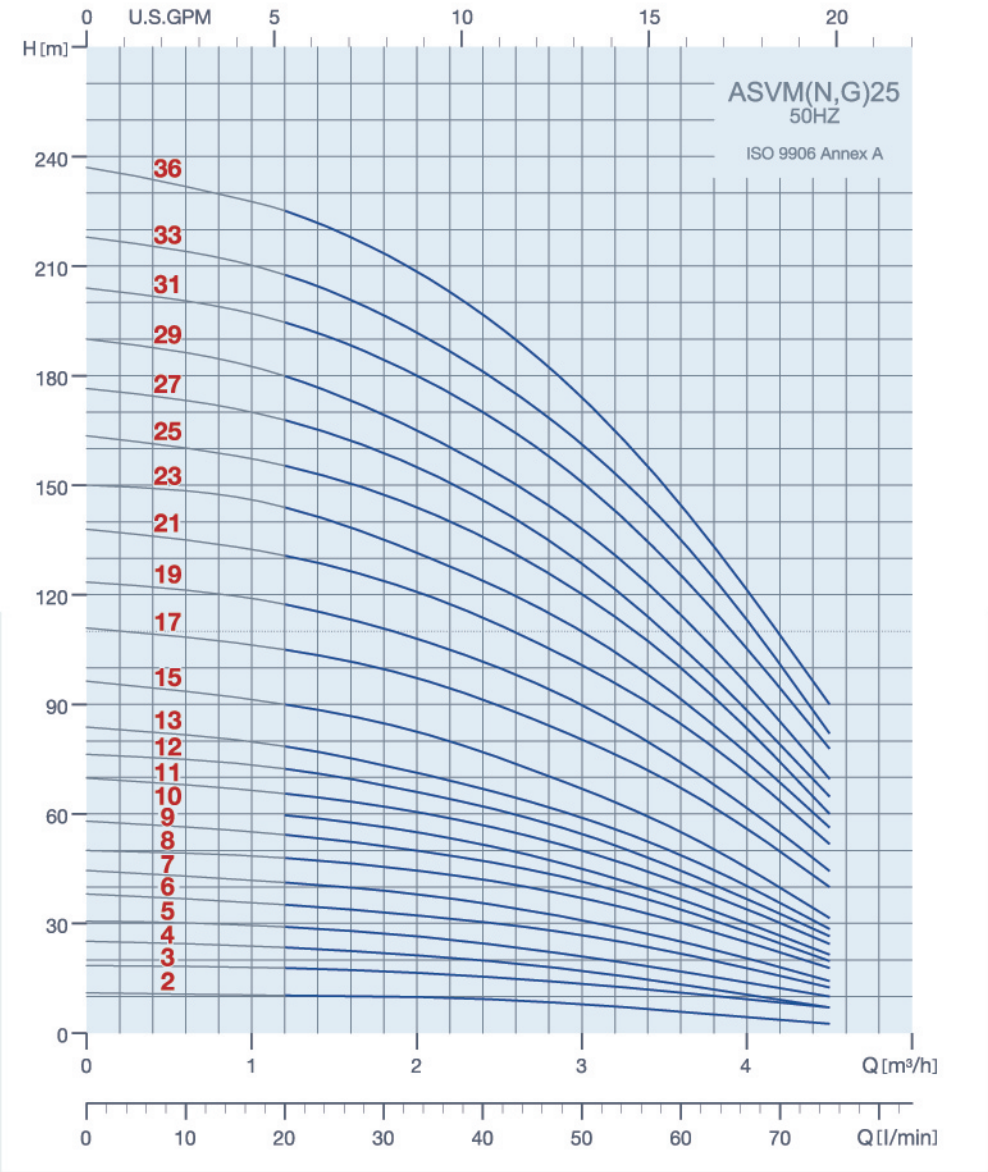

25

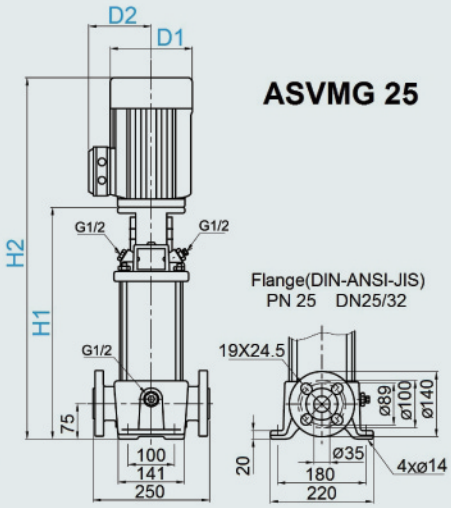

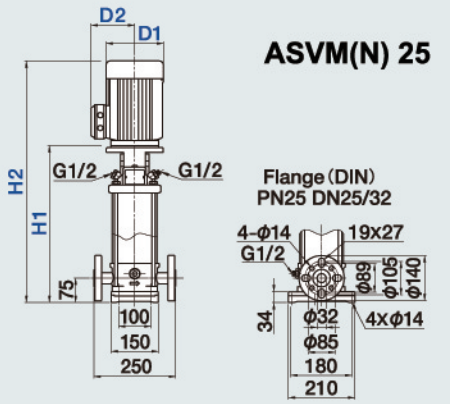

Dimensions and Weights

Model	P_2 [kW]	ASVM(N) , ASVMG		ASVM(N)		ASVMG		ASVM(N)	ASVMG
		D1	D2	H1	H2	H1	H2	Net Weight [Kg]	
		Dimension [mm]							
ASVM(N,G) 252-5.37	0.37	141	115	282	477	279	474	20	23
ASVM(N,G) 253-5.37	0.37	141	115	282	477	279	474	20	23
ASVM(N,G) 254-5.37	0.37	141	115	300	495	297	492	21	24
ASVM(N,G) 255-5.37	0.37	141	115	318	513	315	510	21	24
ASVM(N,G) 256-5.55	0.55	141	115	336	531	333	528	22	25
ASVM(N,G) 257-5.55	0.55	141	115	354	549	351	528	22	25
ASVM(N,G) 258-5.75	0.75	141	115	378	613	375	610	25	28
ASVM(N,G) 259-5.75	0.75	141	115	396	631	393	628	25	28
ASVM(N,G) 2510-5.75	0.75	141	115	414	649	411	646	25	29
ASVM(N,G) 2511-51.1	1.1	141	115	432	667	429	664	27	30
ASVM(N,G) 2512-51.1	1.1	141	115	450	685	447	682	27	31
ASVM(N,G) 2513-51.1	1.1	141	115	468	703	465	700	28	31
ASVM(N,G) 2515-51.1	1.1	141	115	504	739	501	736	28	32
ASVM(N,G) 2517-51.5	1.5	177	141	556	847	553	844	38	41
ASVM(N,G) 2519-51.5	1.5	177	141	592	883	589	880	39	42
ASVM(N,G) 2521-52.2	2.2	177	141	628	919	625	916	42	45
ASVM(N,G) 2523-52.2	2.2	177	141	664	955	661	952	43	46
ASVM(N,G) 2525-52.2	2.2	177	141	700	991	697	988	44	47
ASVM(N,G) 2527-52.2	2.2	177	141	736	1027	733	1024	44	48
ASVM(N,G) 2529-52.2	2.2	177	141	772	1063	769	1060	45	48
ASVM(N,G) 2531-53.0	3.0	197	147	812	1128	809	1125	53	57
ASVM(N,G) 2533-53.0	3.0	197	147	848	1164	845	1161	54	57
ASVM(N,G) 2536-53.0	3.0	197	147	902	1218	899	1215	55	59

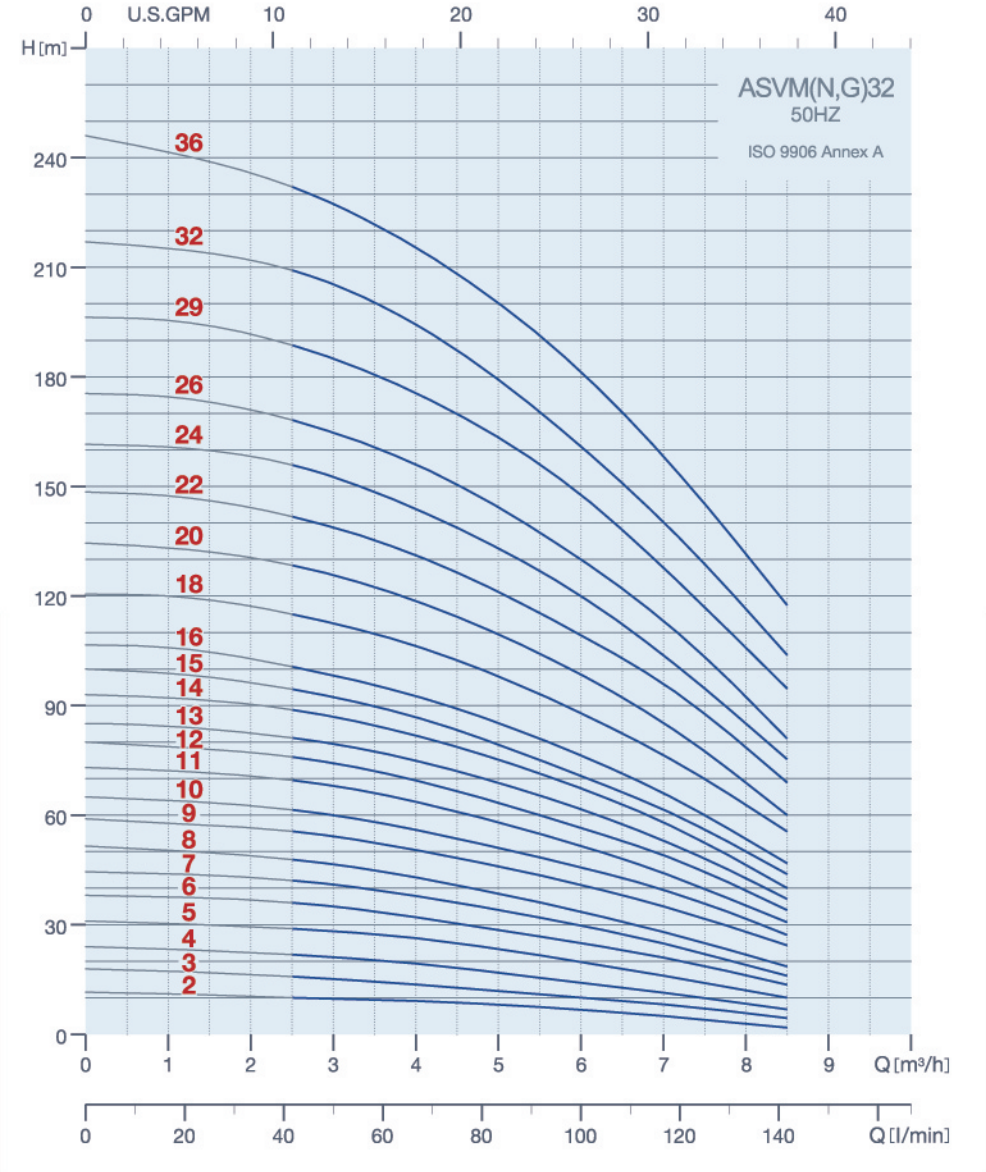

32

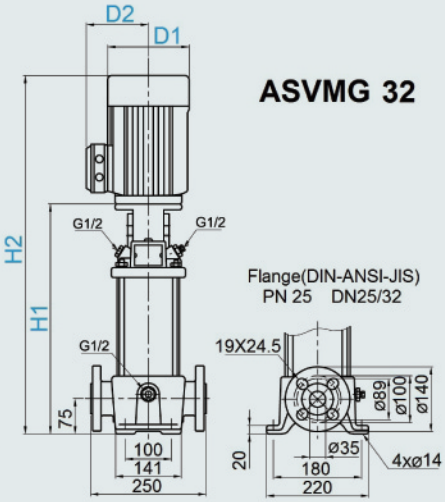

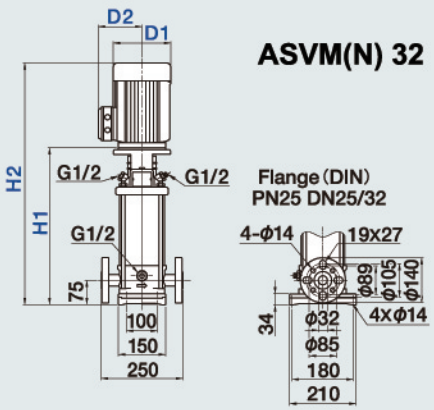

Dimensions and Weights

Model	P_2 [kW]	ASVM(N) , ASVMG		ASVM(N)		ASVMG		ASVM(N)	ASVMG
		D1	D2	H1	H2	H1	H2	Net Weight [Kg]	
		Dimension [mm]							
ASVM(N,G) 322-5.37	0.37	141	115	282	477	279	474	20	23
ASVM(N,G) 323-5.55	0.55	141	115	309	504	306	501	21	24
ASVM(N,G) 324-5.55	0.55	141	115	336	531	333	528	22	25
ASVM(N,G) 325-5.75	0.75	141	115	369	604	366	601	24	27
ASVM(N,G) 326-51.1	1.1	141	115	396	631	393	628	26	29
ASVM(N,G) 327-51.1	1.1	141	115	423	658	420	655	27	30
ASVM(N,G) 328-51.1	1.1	141	115	450	685	447	682	27	30
ASVM(N,G) 329-51.5	1.5	177	141	493	784	490	781	36	39
ASVM(N,G) 3210-51.5	1.5	177	141	520	811	517	808	37	40
ASVM(N,G) 3211-52.2	2.2	177	141	547	838	544	835	40	43
ASVM(N,G) 3212-52.2	2.2	177	141	574	865	571	862	41	44
ASVM(N,G) 3213-52.2	2.2	177	141	601	892	598	889	41	44
ASVM(N,G) 3214-52.2	2.2	177	141	628	919	625	916	42	45
ASVM(N,G) 3215-52.2	2.2	177	141	655	946	652	943	43	45
ASVM(N,G) 3216-52.2	2.2	177	141	682	973	679	970	43	46
ASVM(N,G) 3218-53.0	3.0	197	147	740	1056	737	1053	51	54
ASVM(N,G) 3220-53.0	3.0	197	147	794	1110	791	1107	53	56
ASVM(N,G) 3222-54.0	4.0	220	161	848	1174	845	1171	57	60
ASVM(N,G) 3224-54.0	4.0	220	161	902	1228	899	1225	58	61
ASVM(N,G) 3226-54.0	4.0	220	161	956	1282	953	1279	59	63
ASVM(N,G) 3229-54.0	4.0	220	161	1037	1363	1034	1360	61	65
ASVM(N,G) 3232-55.5	5.5	235	197	1148	1510	1145	1507	86	90
ASVM(N,G) 3236-55.5	5.5	235	197	1256	1618	1253	1615	88	93

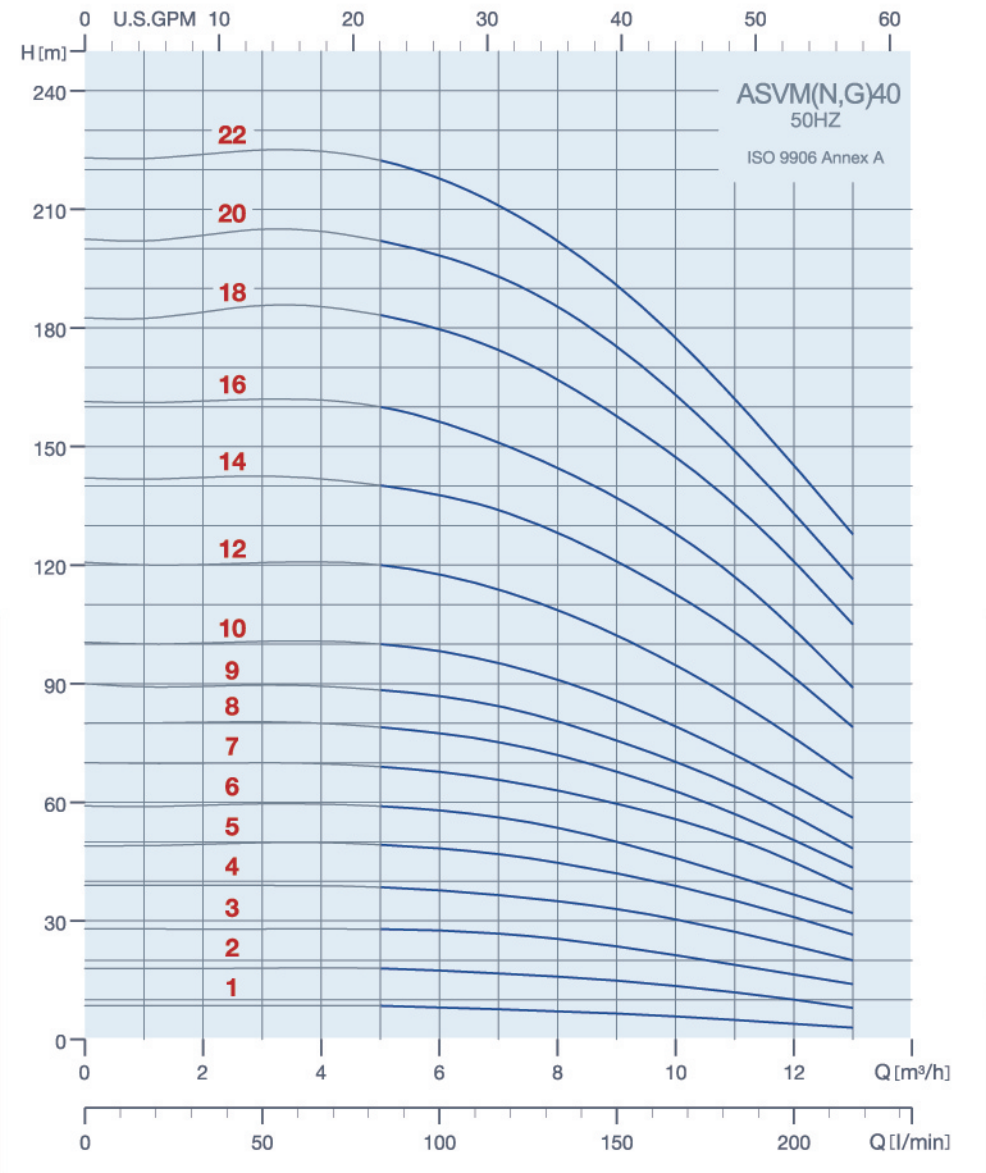

40

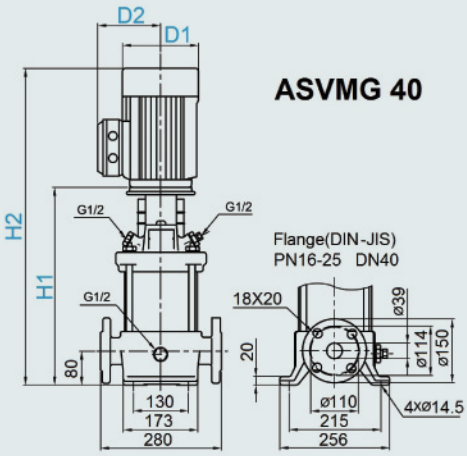

Dimensions and Weights

Model	P_2 [kW]	ASVM(N) , ASVMG		ASVM(N)		ASVMG		ASVM(N)	ASVMG
		D1	D2	H1	H2	H1	H2	Net Weight [Kg]	
		Dimension [mm]							
ASVM(N,G) 401-5.37	0.37	141	115	353	548	343	538	31	36
ASVM(N,G) 402-5.75	0.75	141	115	357	592	347	582	34	38
ASVM(N,G) 403-51.1	1.1	141	115	387	622	377	612	36	40
ASVM(N,G) 404-51.5	1.5	177	141	433	724	423	714	46	50
ASVM(N,G) 405-52.2	2.2	177	141	463	754	453	744	50	54
ASVM(N,G) 406-52.2	2.2	177	141	493	784	483	774	51	55
ASVM(N,G) 407-53.0	3.0	197	147	528	844	518	834	59	64
ASVM(N,G) 408-53.0	3.0	197	147	558	874	548	864	60	65
ASVM(N,G) 409-53.0	3.0	197	147	588	904	578	894	61	66
ASVM(N,G) 4010-54.0	4.0	220	161	618	944	608	934	65	70
ASVM(N,G) 4012-54.0	4.0	220	161	678	1004	668	994	68	72
ASVM(N,G) 4014-55.5	5.5	235	197	770	1132	760	1122	100	104
ASVM(N,G) 4016-55.5	5.5	235	197	830	1192	820	1182	102	106
ASVM(N,G) 4018-57.5	7.5	235	197	890	1288	880	1278	111	114
ASVM(N,G) 4020-57.5	7.5	235	197	950	1348	940	1338	113	117
ASVM(N,G) 4022-57.5	7.5	235	197	1010	1408	1000	1398	115	119

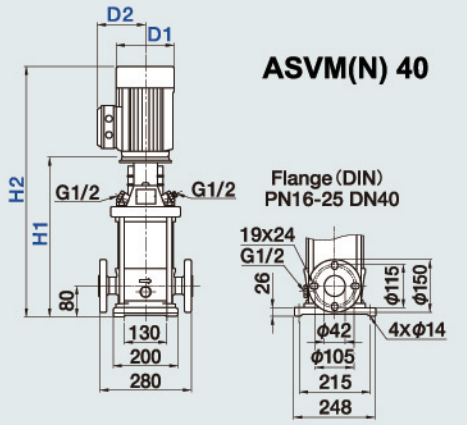

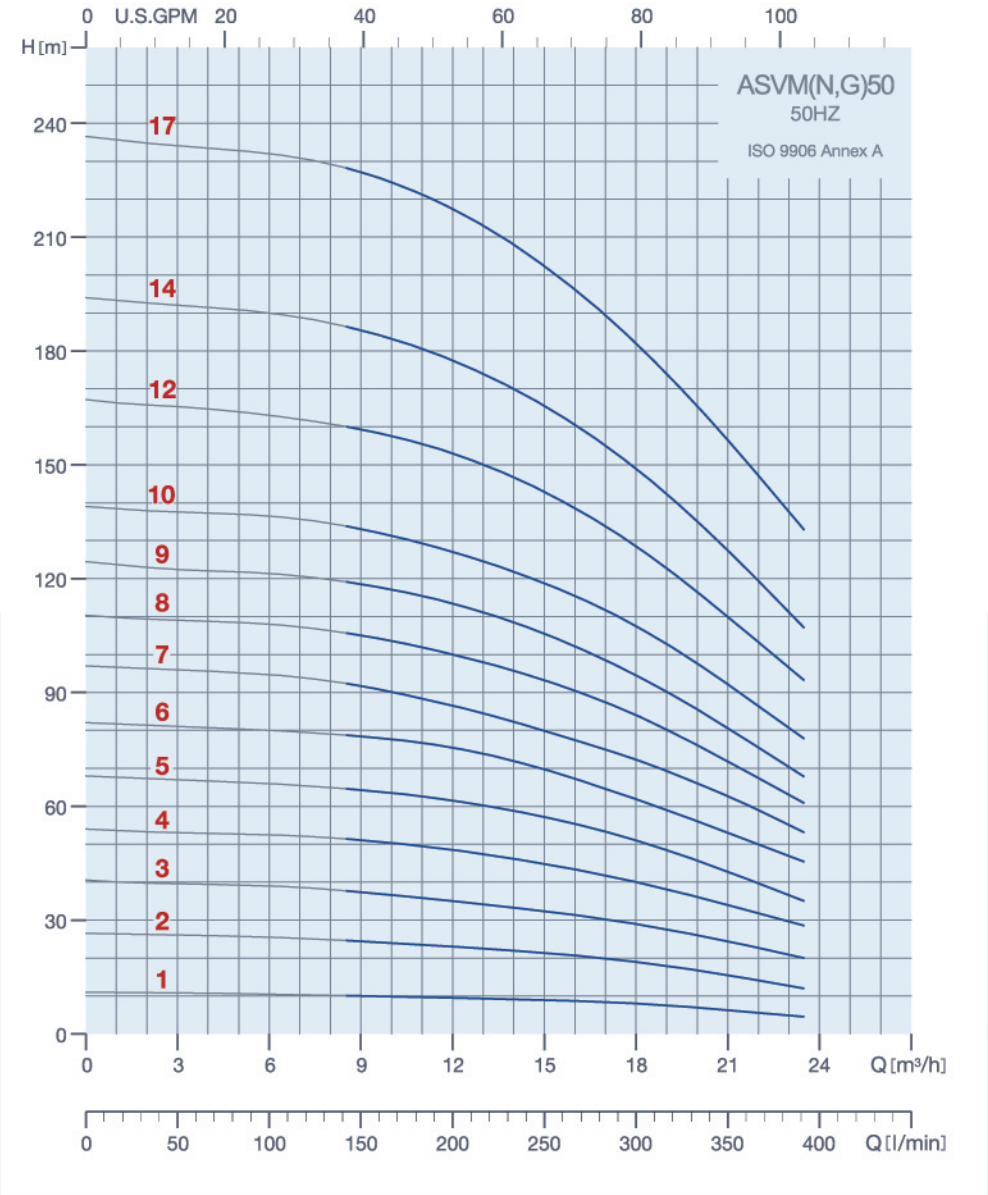

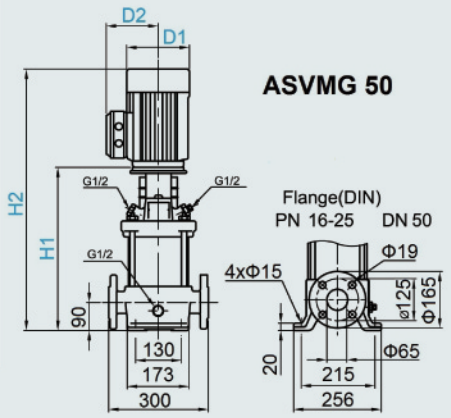

Dimensions and Weights

Model	P_2 [kW]	ASVM(N) , ASVMG		ASVM(N)		ASVMG		ASVM(N)	ASVMG
		D1	D2	H1	H2	H1	H2	Net Weight [Kg]	
		Dimension [mm]							
ASVM(N,G) 501-51.1	1.1	141	115	397	632	400	635	37	44
ASVM(N,G) 502-52.2	2.2	177	141	413	704	415	706	48	56
ASVM(N,G) 503-53.0	3.0	197	147	463	779	465	781	57	65
ASVM(N,G) 504-54.0	4.0	220	161	508	834	510	836	62	70
ASVM(N,G) 505-54.0	4.0	220	161	553	879	555	881	63	71
ASVM(N,G) 506-55.5	5.5	235	197	630	992	632	994	95	102
ASVM(N,G) 507-55.5	5.5	235	197	675	1037	677	1039	97	104
ASVM(N,G) 508-57.5	7.5	235	197	720	1118	722	1120	105	112
ASVM(N,G) 509-57.5	7.5	235	197	765	1163	767	1165	106	113
ASVM(N,G) 5010-511	11.0	318	154	887	1392	889	1394	143	150
ASVM(N,G) 5012-511	11.0	318	154	977	1482	979	1484	146	153
ASVM(N,G) 5014-511	11.0	318	154	1067	1572	1069	1574	149	156
ASVM(N,G) 5017-515	15.0	318	154	1202	1712	1204	1714	164	172

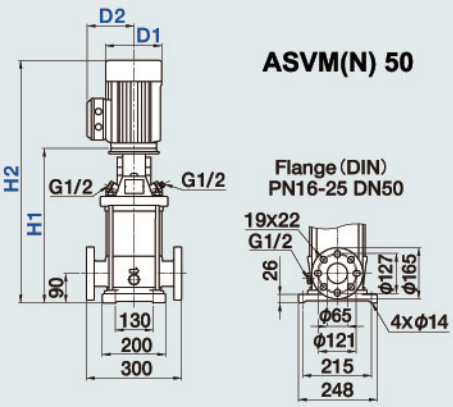

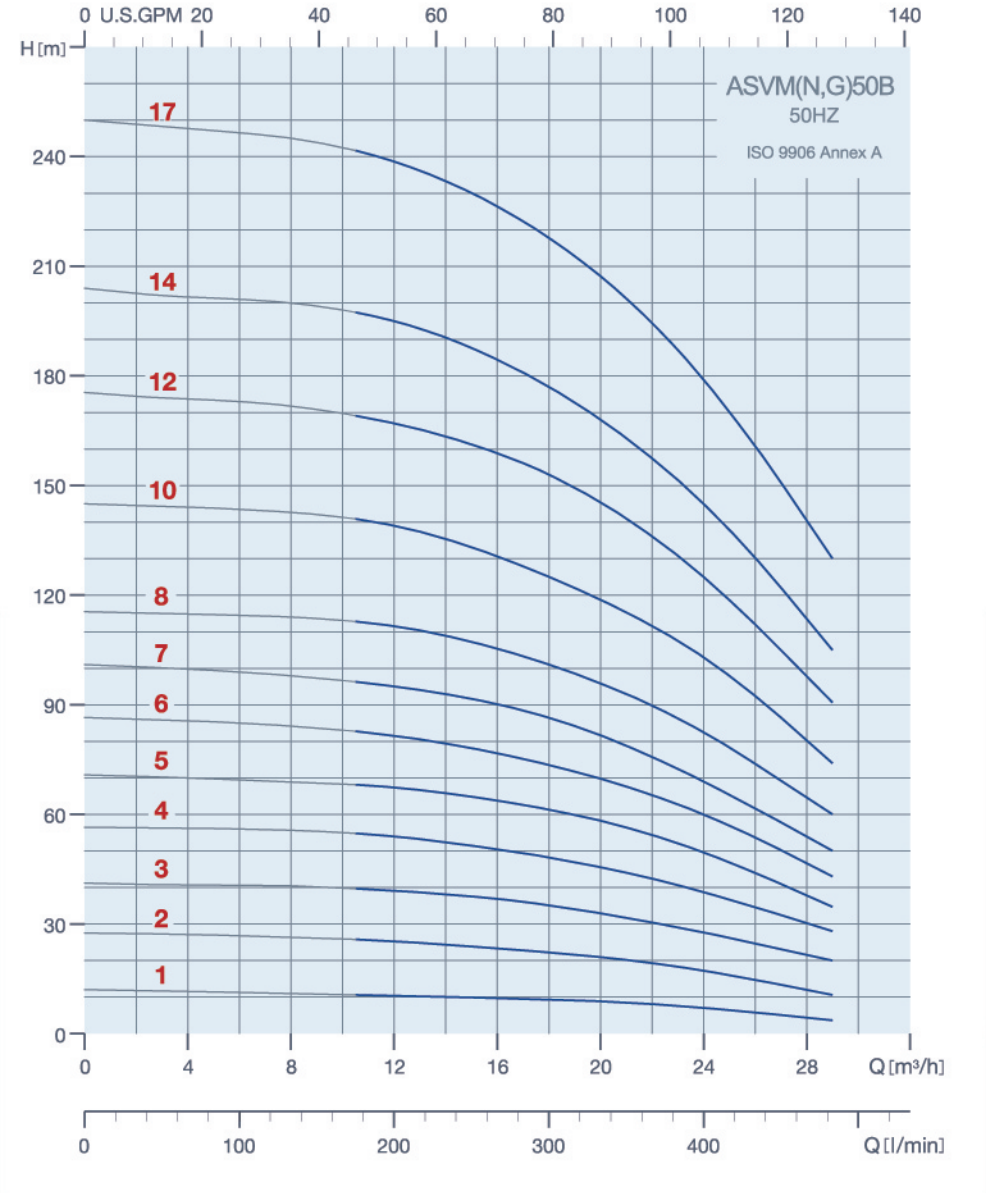

50B

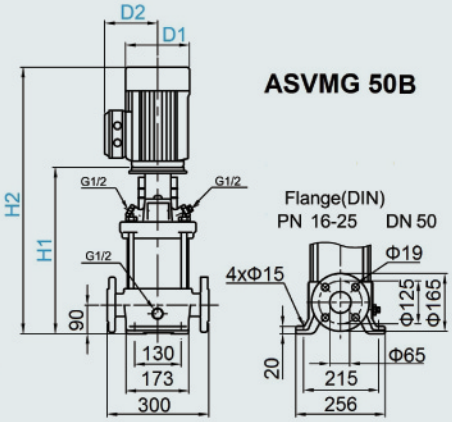

Dimensions and Weights

Model	P_2 [kW]	ASVM(N) , ASVMG		ASVM(N)		ASVMG		ASVM(N)	ASVMG
		D1	D2	H1	H2	H1	H2	Net Weight [Kg]	
		Dimension [mm]							
ASVM(N,G) 50B1-51.1	1.1	141	115	397	632	400	636	37	44
ASVM(N,G) 50B2-52.2	2.2	177	141	413	704	415	708	48	56
ASVM(N,G) 50B3-54.0	4.0	220	161	463	789	465	795	60	68
ASVM(N,G) 50B4-55.5	5.5	235	197	540	902	542	910	92	99
ASVM(N,G) 50B5-55.5	5.5	235	197	585	947	587	955	94	101
ASVM(N,G) 50B6-57.5	7.5	235	197	630	1028	632	1038	102	109
ASVM(N,G) 50B7-57.5	7.5	235	197	675	1073	677	1083	103	110
ASVM(N,G) 50B8-511	11.0	318	245	797	1302	799	1315	140	147
ASVM(N,G) 50B10-511	11.0	318	245	887	1392	889	1405	143	150
ASVM(N,G) 50B12-515	15.0	318	245	977	1487	979	1504	156	163
ASVM(N,G) 50B14-515	15.0	318	245	1067	1577	1069	1594	159	166
ASVM(N,G) 50B17-518	18.5	318	245	1202	1752	1204	1773	189	195

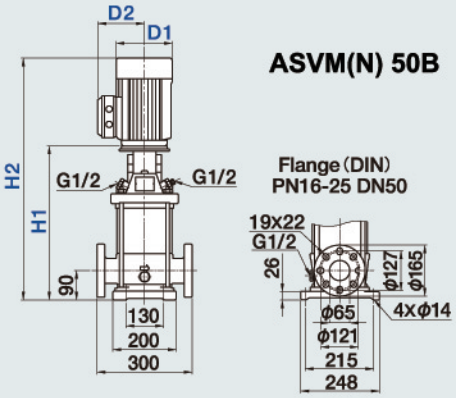

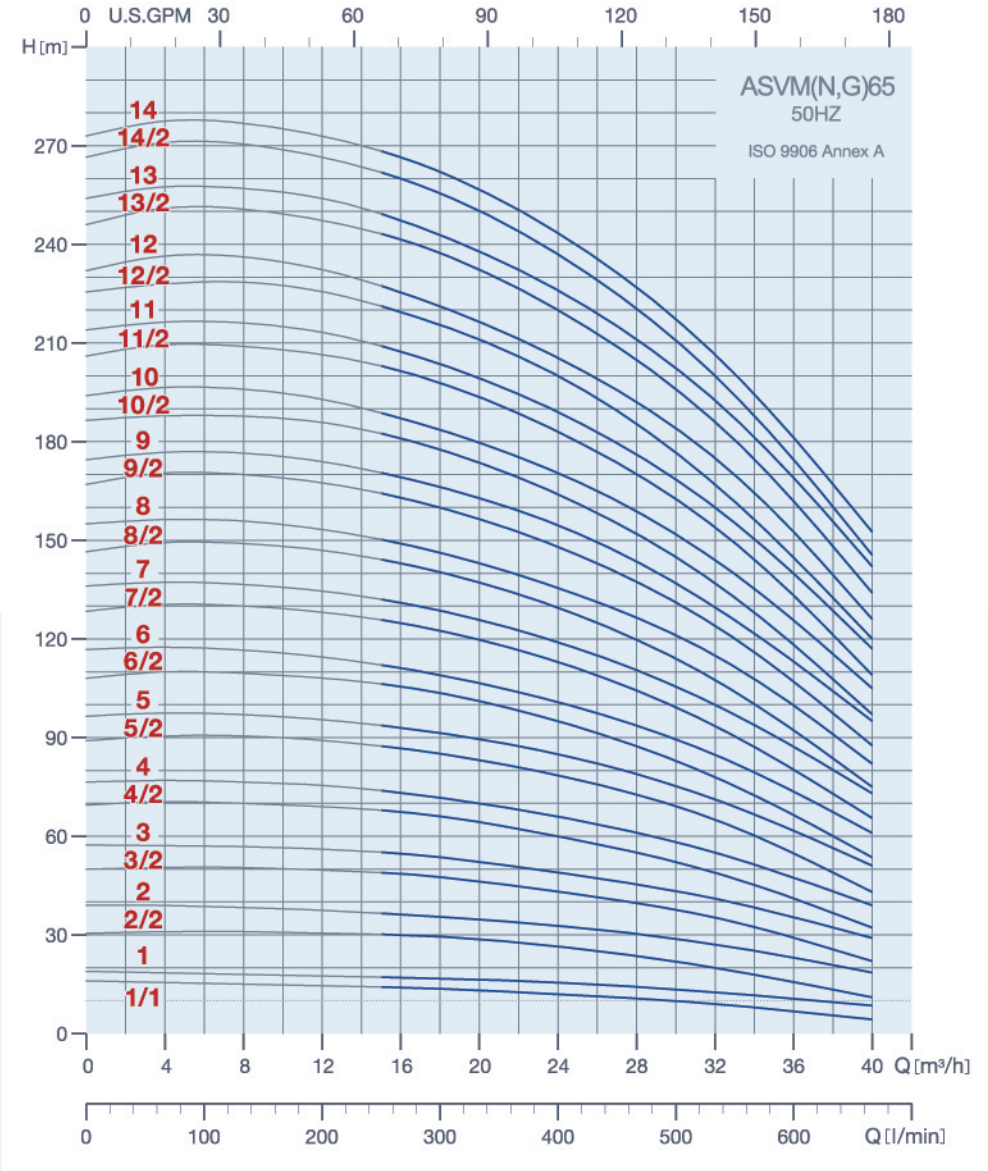

65

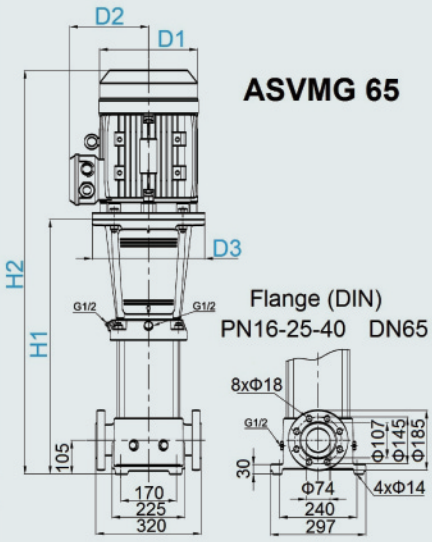

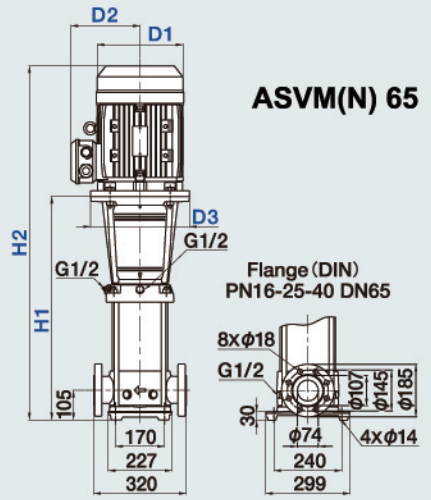

Dimensions and Weights

Model	P_2 [kW]	ASVM(N) , ASVMG			ASVM(N)		ASVMG		ASVM(N)	ASVMG
		D1	D2	D3	H1	H2	H1	H2	Net Weight [Kg]	
		Dimension [mm]								
ASVM(N,G) 651/1-51.5	1.5	177	141	280	504	795	504	795	67	72
ASVM(N,G) 651-52.2	2.2	177	141	280	504	795	504	795	69	74
ASVM(N,G) 652/2-53.0	3.0	197	147	280	574	935	574	935	79	84
ASVM(N,G) 652-54.0	4.0	220	161	280	574	900	574	900	83	88
ASVM(N,G) 653/2-55.5	5.5	235	197	300	644	1006	644	1006	105	110
ASVM(N,G) 653-55.5	5.5	235	197	300	644	1006	644	1006	105	110
ASVM(N,G) 654/2-57.5	7.5	235	197	300	714	1112	714	1112	115	120
ASVM(N,G) 654-57.5	7.5	235	197	300	714	1112	714	1112	115	120
ASVM(N,G) 655/2-511	11.0	318	245	350	894	1399	894	1399	158	163
ASVM(N,G) 655-511	11.0	318	245	350	894	1399	894	1399	158	163
ASVM(N,G) 656/2-511	11.0	318	245	350	964	1469	964	1469	161	166
ASVM(N,G) 656-511	11.0	318	245	350	964	1469	964	1469	161	166
ASVM(N,G) 657/2-515	15.0	318	245	350	1034	1544	1034	1544	175	180
ASVM(N,G) 657-515	15.0	318	245	350	1034	1544	1034	1544	175	180
ASVM(N,G) 658/2-515	15.0	318	245	350	1104	1614	1104	1614	178	183
ASVM(N,G) 658-515	15.0	318	245	350	1104	1614	1104	1614	178	183
ASVM(N,G) 659/2-518	18.5	318	245	350	1174	1724	1174	1724	206	211
ASVM(N,G) 659-518	18.5	318	245	350	1174	1724	1174	1724	206	211
ASVM(N,G) 6510/2-518	18.5	318	245	350	1244	1794	1244	1794	208	213
ASVM(N,G) 6510-518	18.5	318	245	350	1244	1794	1244	1794	208	214
ASVM(N,G) 6511/2-522	22.0	358	265	350	1314	1894	1314	1894	254	259
ASVM(N,G) 6511-522	22.0	358	265	350	1314	1894	1314	1894	254	259
ASVM(N,G) 6512/2-522	22.0	358	265	350	1384	1964	1384	1964	256	261
ASVM(N,G) 6512-522	22.0	358	265	350	1384	1964	1384	1964	256	261
ASVM(N,G) 6513/2-530	30.0	420	295	400	1454	2114	1454	2114	324	328
ASVM(N,G) 6513-530	30.0	420	295	400	1454	2114	1454	2114	324	328
ASVM(N,G) 6514/2-530	30.0	420	295	400	1524	2184	1524	2184	326	331
ASVM(N,G) 6514-530	30.0	420	295	400	1524	2184	1524	2184	326	331

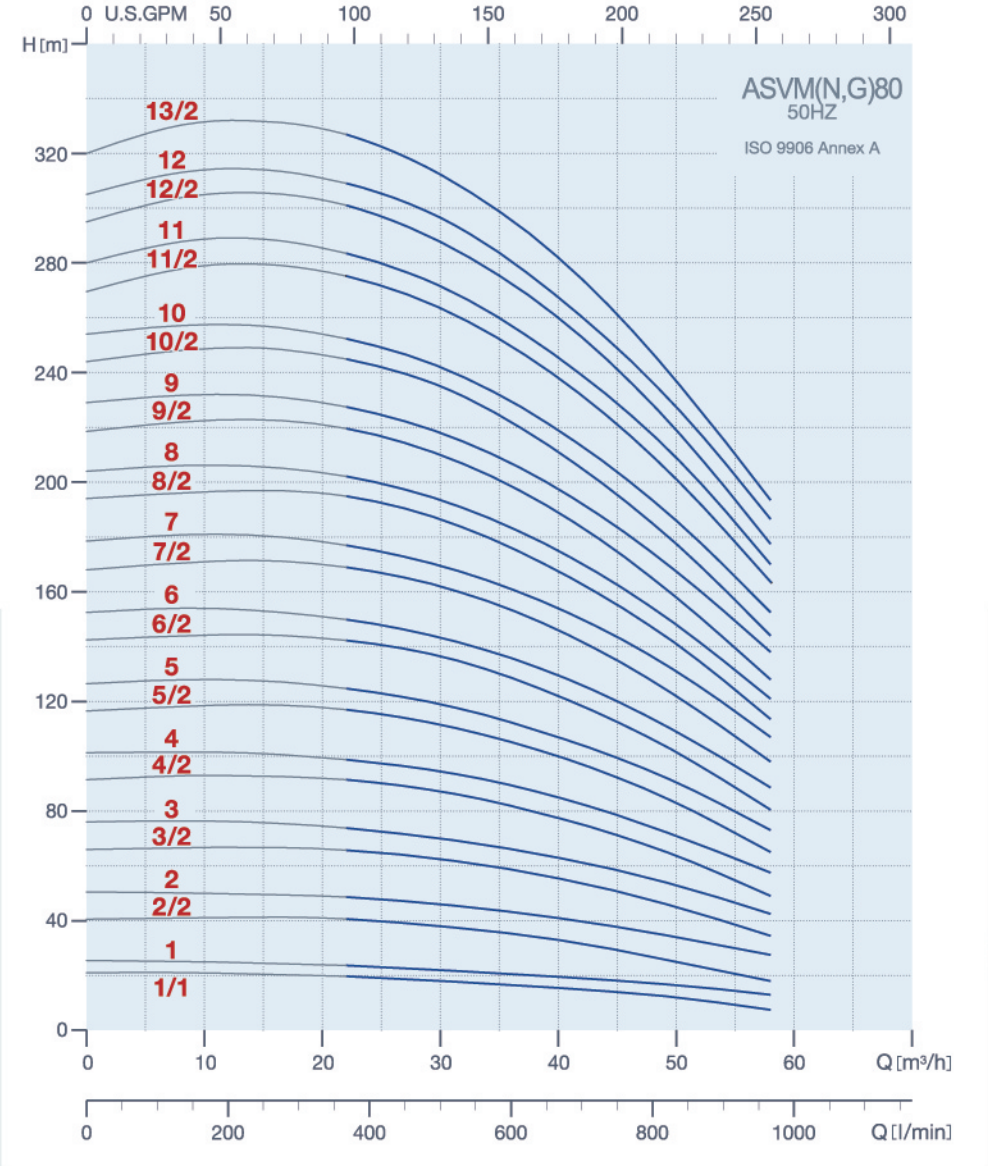

80

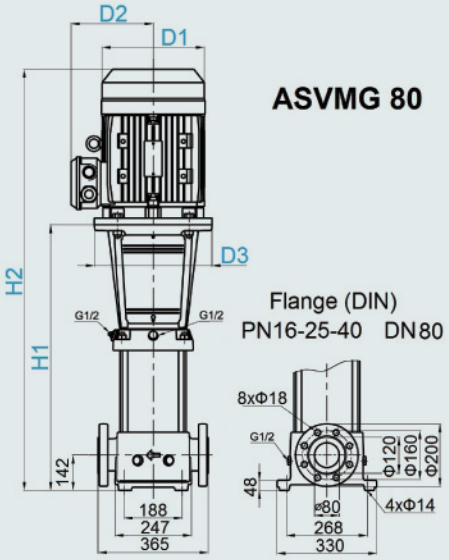

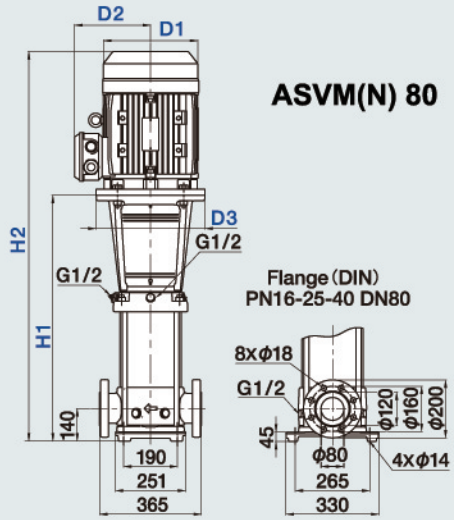

Dimensions and Weights

Model	P_2 [kW]	ASVM(N) , ASVMG			ASVM(N)		ASVMG		ASVM(N)	ASVMG
		D1	D2	D3	H1	H2	H1	H2	Net Weight [Kg]	
		Dimension [mm]								
ASVM(N,G) 801/1-53.0	3.0	197	147	280	559	875	561	877	83	92
ASVM(N,G) 801-54.0	4.0	220	161	280	559	885	561	877	86	95
ASVM(N,G) 802/2-55.5	5.5	235	197	300	639	1001	641	1003	110	118
ASVM(N,G) 802-57.5	7.5	235	197	300	639	1037	641	1039	116	125
ASVM(N,G) 803/2-511	11.0	318	245	350	829	1334	831	1336	160	169
ASVM(N,G) 803-511	11.0	318	245	350	829	1334	831	1336	160	169
ASVM(N,G) 804/2-515	15.0	318	245	350	909	1419	911	1421	174	183
ASVM(N,G) 804-515	15.0	318	245	350	909	1419	911	1421	174	183
ASVM(N,G) 805/2-518	18.5	318	245	350	989	1539	911	1541	203	212
ASVM(N,G) 805-518	18.5	318	245	350	989	1539	911	1541	203	212
ASVM(N,G) 806/2-522	22.0	358	265	350	1069	1649	1071	1651	249	258
ASVM(N,G) 806-522	22.0	358	265	350	1069	1649	1071	1651	249	258
ASVM(N,G) 8007/2-530	30.0	420	295	400	1149	1809	1151	1811	318	326
ASVM(N,G) 8007-530	30.0	420	295	400	1149	1809	1151	1811	318	327
ASVM(N,G) 808/2-530	30.0	420	295	400	1229	1889	1231	1891	321	330
ASVM(N,G) 808-530	30.0	420	295	400	1229	1889	1231	1891	322	331
ASVM(N,G) 809/2-530	30.0	420	295	400	1309	1969	1311	1971	325	334
ASVM(N,G) 809-537	37.0	420	295	400	1309	1969	1311	1971	338	347
ASVM(N,G) 8010/2-537	37.0	420	295	400	1389	2049	1391	2051	342	351
ASVM(N,G) 8010-537	37.0	420	295	400	1389	2049	1391	2051	342	351
ASVM(N,G) 8011/2-545	45.0	470	325	450	1469	2159	1471	2161	404	413
ASVM(N,G) 8011-545	45.0	470	325	450	1469	2159	1471	2161	404	413
ASVM(N,G) 8012/2-545	45.0	470	325	450	1549	2239	1551	2241	407	416
ASVM(N,G) 8012-545	45.0	470	325	450	1549	2239	1551	2241	407	416
ASVM(N,G) 8013/2-545	45.0	470	325	450	1629	2319	1631	2321	411	420

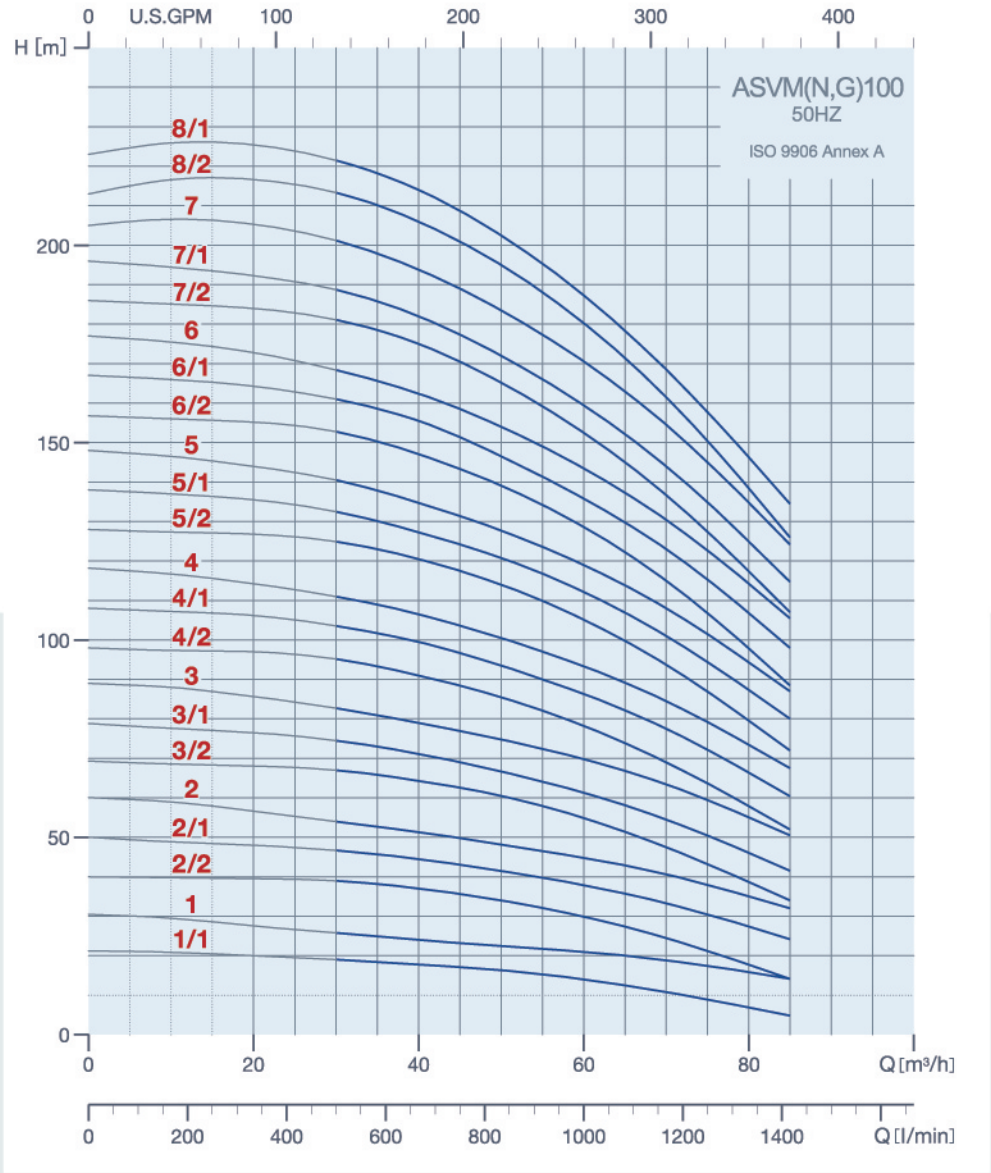

100

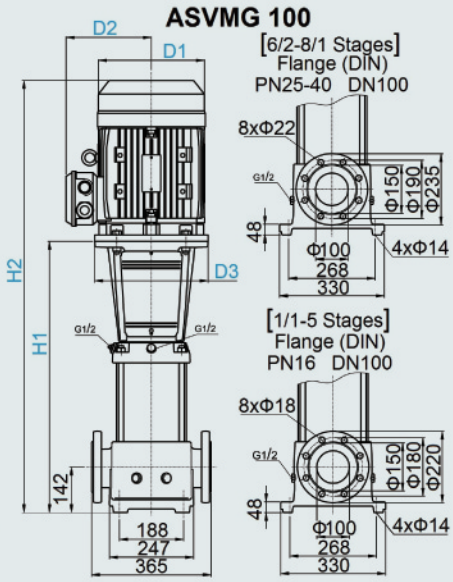

Dimensions and Weights

Model	P_2 [kW]	ASVM(N) , ASVMG			ASVM(N)		ASVMG		ASVM(N)	ASVMG
		D1	D2	D3	H1	H2	H1	H2	Net Weight [Kg]	
		Dimension [mm]								
ASVM(N,G) 1001/1-54.0	4.0	220	161	280	563	889	563	889	82	89
ASVM(N,G) 1001-55.5	5.5	235	197	300	563	613	563	613	101	108
ASVM(N,G) 1002/2-57.5	7.5	235	197	300	646	702	646	702	112	119
ASVM(N,G) 1002/1-511	11.0	318	245	350	756	1261	756	1261	152	159
ASVM(N,G) 1002-511	11.0	318	245	350	756	1261	756	1261	152	159
ASVM(N,G) 1003/2-515	15.0	318	245	350	838	1348	838	1348	167	174
ASVM(N,G) 1003/1-515	15.0	318	245	350	838	1348	838	1348	167	174
ASVM(N,G) 1003-518	18.5	318	245	350	838	1388	838	1388	191	199
ASVM(N,G) 1004/2-518	18.5	318	245	350	921	1471	921	1471	195	203
ASVM(N,G) 1004/1-522	22.0	358	265	350	921	1501	921	1501	238	246
ASVM(N,G) 1004-522	22.0	358	265	350	921	1501	921	1501	238	246
ASVM(N,G) 1005/2-530	30.0	420	295	400	1003	1663	1003	1663	307	314
ASVM(N,G) 1005/1-530	30.0	420	295	400	1003	1663	1003	1663	307	314
ASVM(N,G) 1005-530	30.0	420	295	400	1003	1663	1003	1663	307	314
ASVM(N,G) 1006/2-530	30.0	420	295	400	1086	1746	1086	1746	311	318
ASVM(N,G) 1006/1-537	37.0	420	295	400	1086	1746	1086	1746	324	331
ASVM(N,G) 1006-537	37.0	420	295	400	1086	1746	1086	1746	324	331
ASVM(N,G) 1007/2-537	37.0	420	295	400	1168	1828	1168	1828	328	335
ASVM(N,G) 1007/1-537	37.0	420	295	400	1168	1828	1168	1828	328	335
ASVM(N,G) 1007-545	45.0	470	325	450	1172	1862	1172	1862	386	393
ASVM(N,G) 1008/2-545	45.0	470	325	450	1255	1945	1255	1945	390	398
ASVM(N,G) 1008/1-545	45.0	470	325	450	1255	1945	1255	1945	390	398

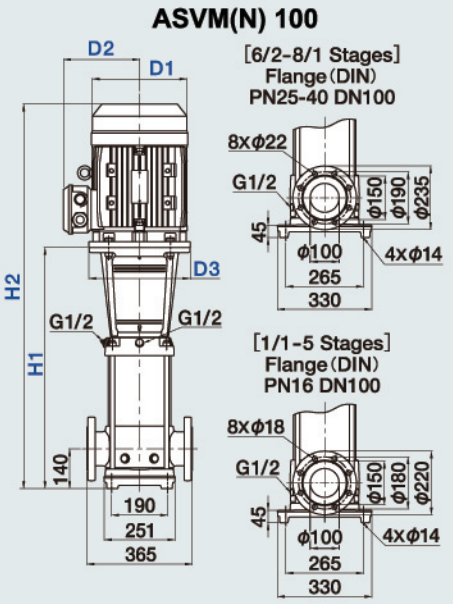

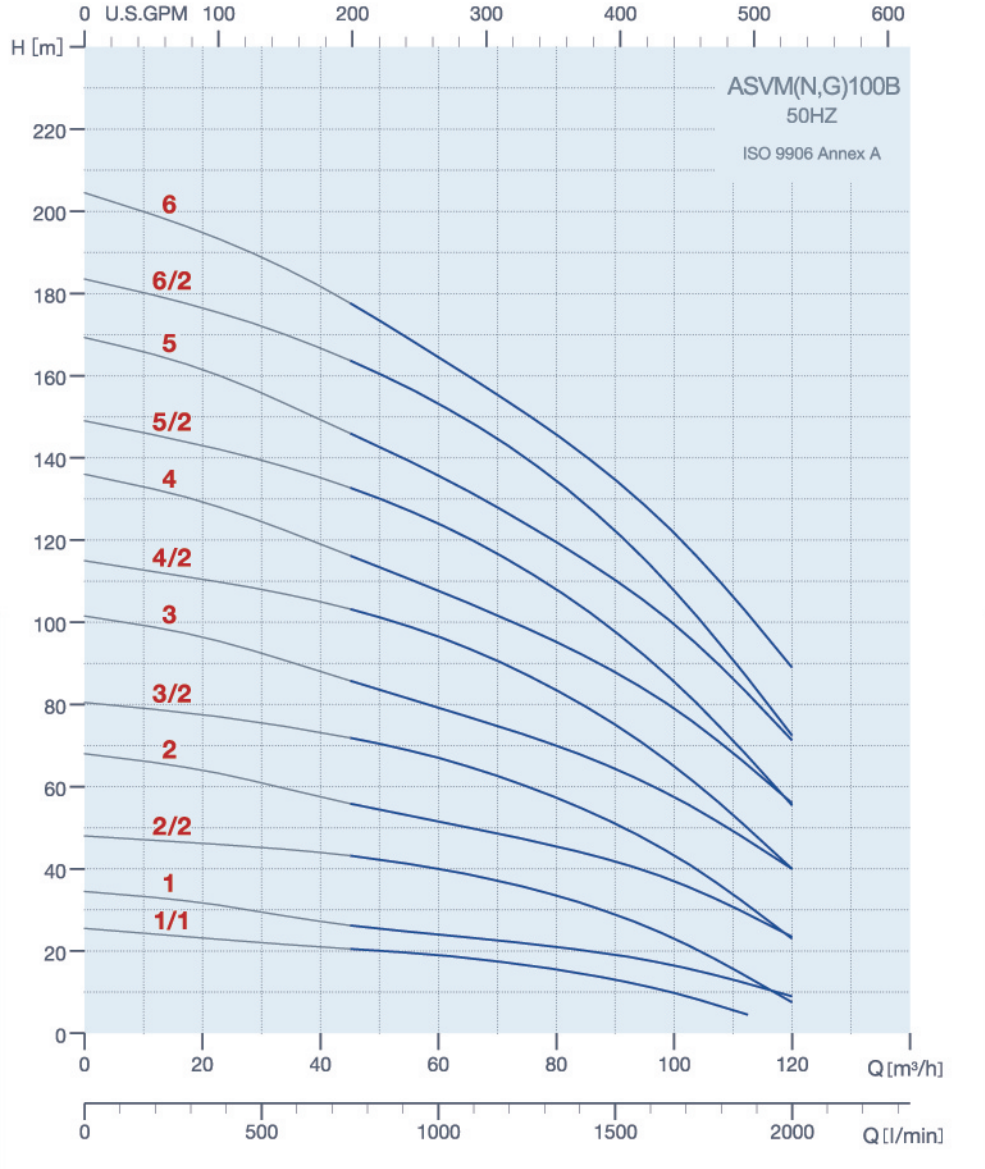

100B

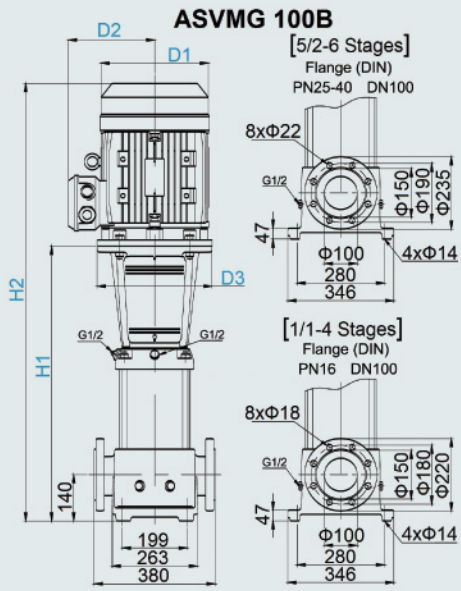

Dimensions and Weights

Model	P_2 [kW]	ASVM(N) , ASVMG			ASVM(N)		ASVMG		ASVM(N)	ASVMG
		D1	D2	D3	H1	H2	H1	H2	Net Weight [Kg]	
		Dimension [mm]								
ASVM(N,G) 100B1/1-55.5	5.5	235	197	300	576	938	572	934	112	122
ASVM(N,G) 100B1-57.5	7.5	235	197	300	576	974	572	970	118	129
ASVM(N,G) 100B2/2-511	11.0	318	245	350	778	1283	774	1279	164	174
ASVM(N,G) 100B2-515	15.0	318	245	350	778	1288	774	1284	174	185
ASVM(N,G) 100B3/2-518	18.5	318	245	350	870	1420	866	1416	204	215
ASVM(N,G) 100B3-522	22.0	358	265	350	870	1450	866	1446	247	258
ASVM(N,G) 100B4/2-530	30.0	420	295	400	962	1622	958	1618	317	327
ASVM(N,G) 100B4-530	30.0	420	295	400	962	1622	958	1618	317	327
ASVM(N,G) 100B5/2-537	37.0	420	295	400	1054	1714	1050	1710	337	347
ASVM(N,G) 100B5-537	37.0	420	295	400	1054	1714	1050	1710	337	347
ASVM(N,G) 100B6/2-545	45.0	470	325	450	1146	1836	1142	1832	400	410
ASVM(N,G) 100B6-545	45.0	470	325	450	1146	1836	1142	1832	400	410

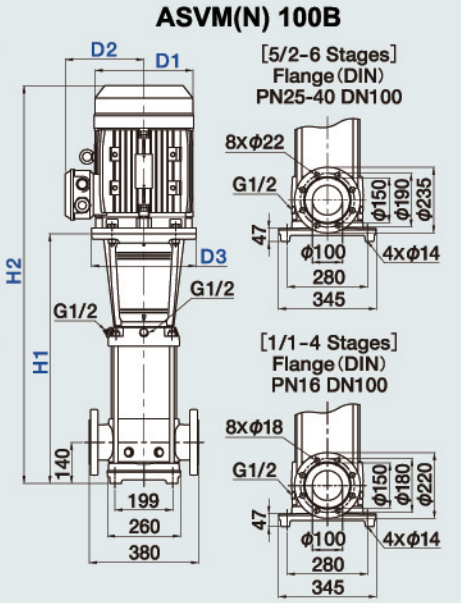

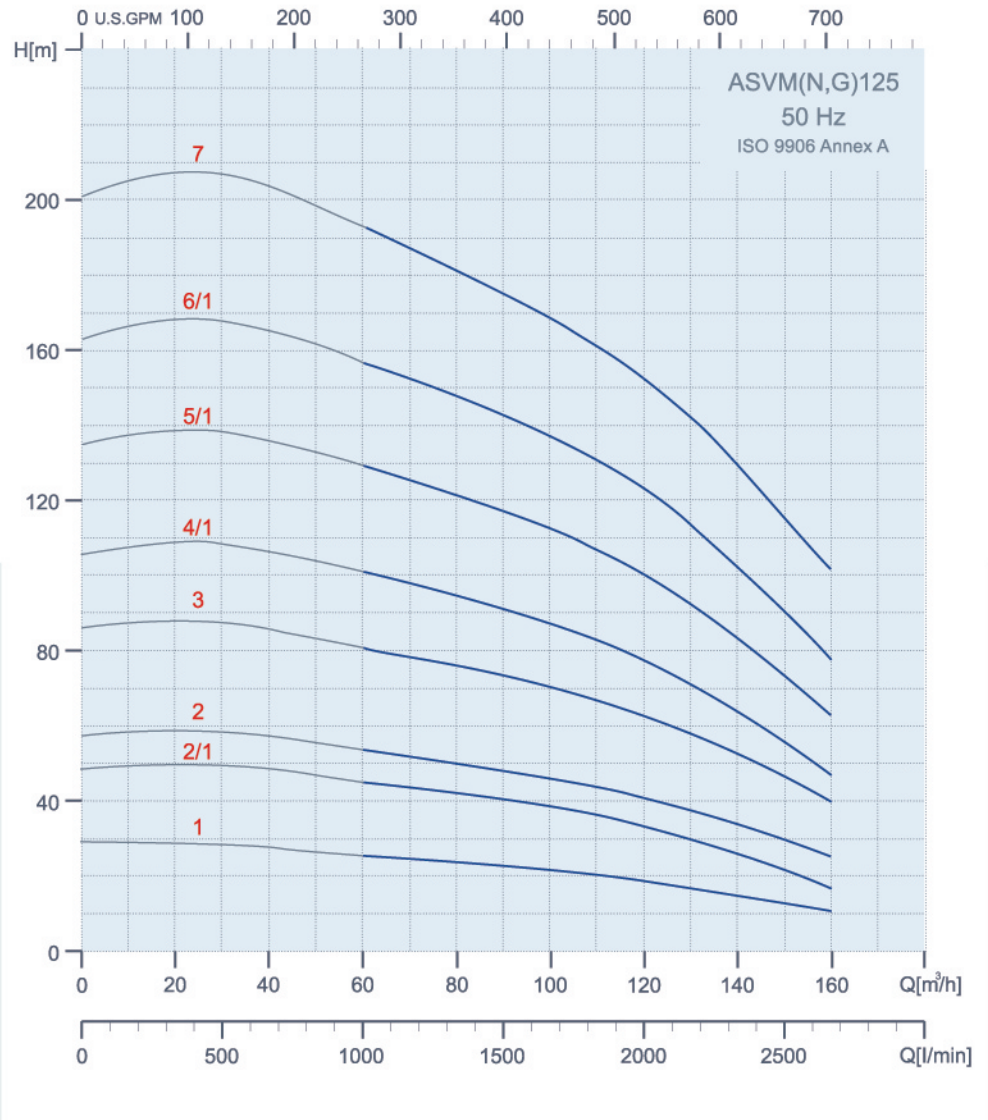

125

Dimensions and Weights

Model	P_2 [kW]	ASVM(N) , ASVMG			ASVM(N)		ASVMG		ASVM(N)	ASVMG
		D1	D2	D3	H1	H2	H1	H2	Net Weight [Kg]	
		Dimension [mm]								
ASVM(N,G) 1251-511	11	318	245	350	837	1342	834	1339	184	200
ASVM(N,G) 1252/1-518	18.5	318	245	350	993	1543	990	1540	230	245
ASVM(N,G) 1252-522	22	358	265	350	993	1573	990	1570	276	292
ASVM(N,G) 1253-530	30	420	295	400	1149	1809	1145	1805	347	363
ASVM(N,G) 1254/1-537	37	420	295	400	1304	1964	1301	1961	370	386
ASVM(N,G) 1255/1-545	45	470	325	450	1463	2153	1460	2150	438	454
ASVM(N,G) 1256/1-555	55	510	355	550	1645	2415	1642	2412	564	579
ASVM(N,G) 1257-575	75	580	410	550	1800	2645	1797	2642	737	751

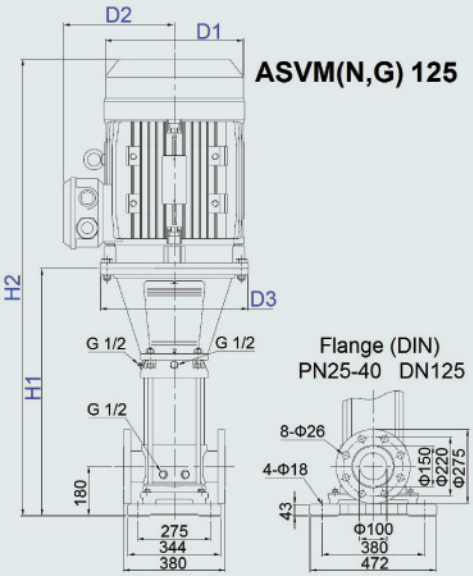

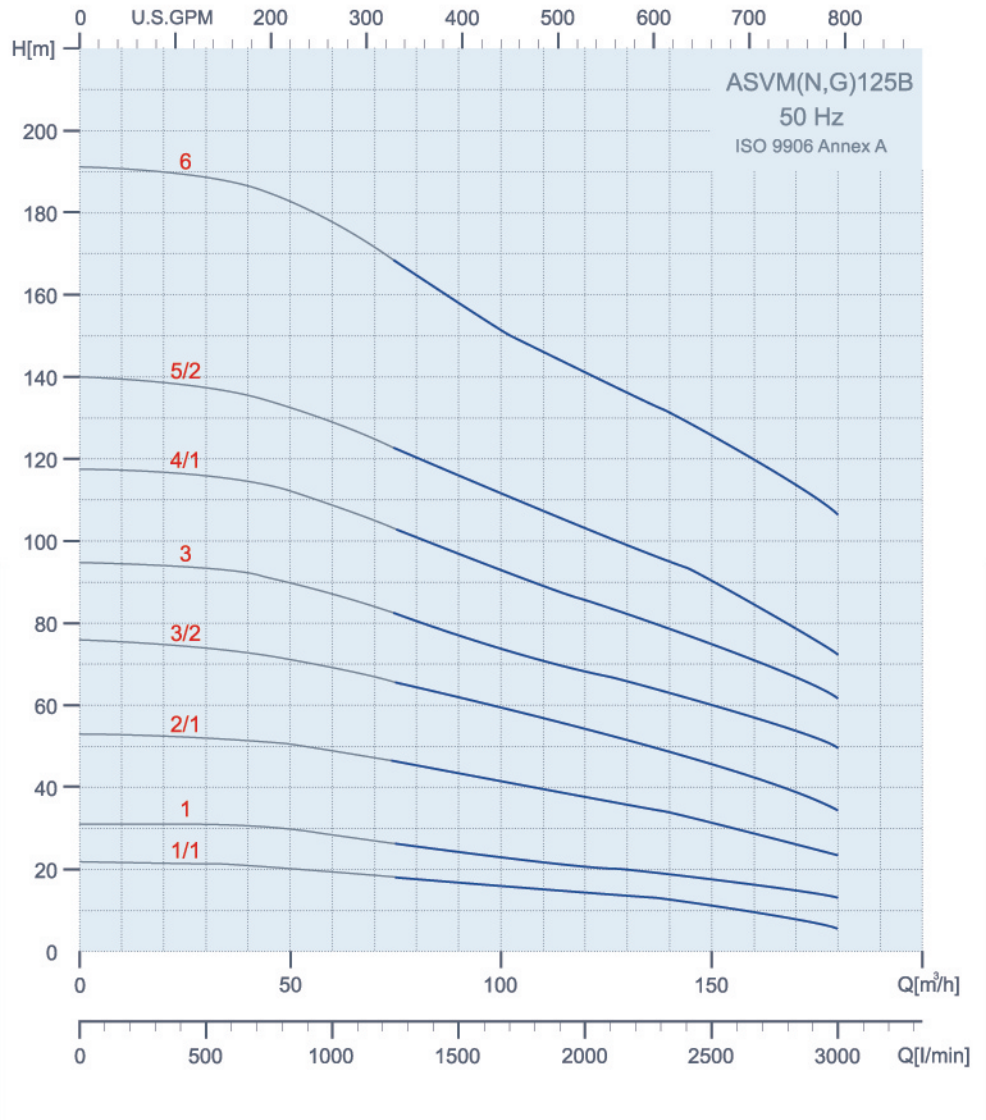

125B

Dimensions and Weights

Model	P_2 [kW]	ASVM(N) , ASVMG			ASVM(N)		ASVMG		ASVM(N)	ASVMG
		D1	D2	D3	H1	H2	H1	H2	Net Weight [Kg]	
		Dimension [mm]								
ASVM(N,G) 125B1/1-511	11	318	245	350	837	1342	834	1339	173	200
ASVM(N,G) 125B1-515	15	318	245	350	837	1347	834	1344	184	210
ASVM(N,G) 125B2/1-522	22	358	265	350	993	1573	990	1570	272	288
ASVM(N,G) 125B3/2-530	30	420	295	400	1148	1808	1145	1805	346	362
ASVM(N,G) 125B3-537	37	420	295	400	1148	1808	1145	1805	359	375
ASVM(N,G) 125B4/1-545	45	470	325	450	1308	1998	1305	1995	427	443
ASVM(N,G) 125B5/2-555	55	510	355	550	1489	2259	1486	2256	553	569
ASVM(N,G) 125B6-575	75	580	410	550	1645	2490	1642	2487	726	741

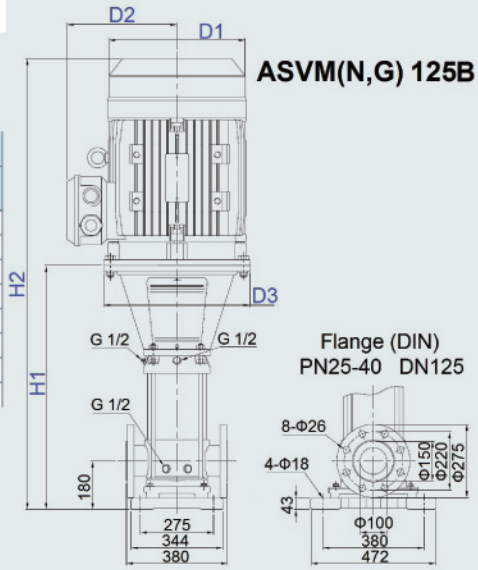

ASVM(N,G) 25L/25/32/40/50/50B

Sectional view and Materials

ASVM(N) 25L/25/32/40/50/50B

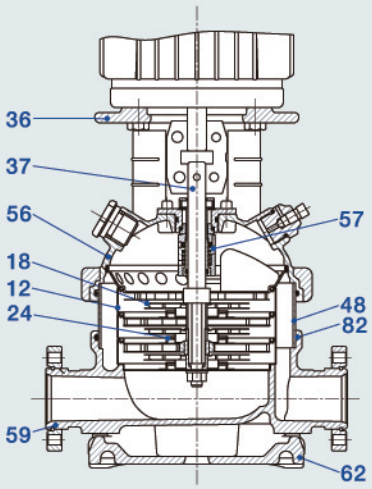

ASVMG 25L/25/32/40/50/50B

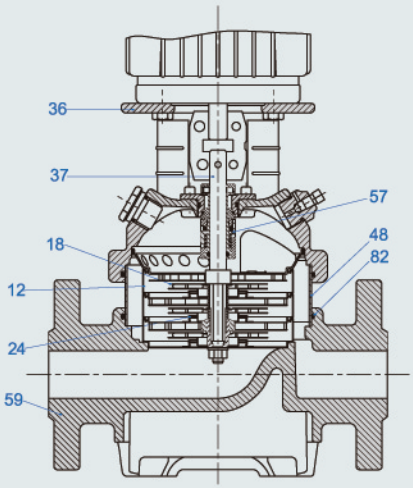

Pos.	Name	Material	ASVM 25L, 25, 32, 40, 50, 50B			ASVMN 25L, 25, 32, 40, 50, 50B			ASVMG 25L, 25, 32, 40, 50, 50B		
			Standard			Standard			Standard		
			Europe	USA	JIS	Europe	USA	JIS	Europe	USA	JIS
36	Pump head	Cast Iron	EN-GJS-450-10	ASTM65-45-12	FCD450	EN-GJS-450-10	ASTM65-45-12	FCD450	EN-GJL-200	ASTM 25B	FC200
56	Pump head cover	Stainless steel	1.4301	AISI 304	SCS13	1.4401	AISI 316	SCS14	NA		
18	Impeller	Stainless steel	1.4301	AISI 304	SUS304	1.4401	AISI 316	SUS316	1.4301	AISI 304	SUS304
37	Shaft	Stainless steel	1.4057	AISI 431	SUS431	1.4401	AISI 316	SUS316	1.4057	AISI 431	SUS431
48	Outer Sleeve	Stainless steel	1.4301	AISI 304	SUS304	1.4401	AISI 316	SUS316	1.4301	AISI 304	SUS304
82	O-ring for outer sleeve		EPDM								
12	Chamber	Stainless steel	1.4301	AISI 304	SUS304	1.4401	AISI 316	SUS316	1.4301	AISI 304	SUS304
24	Neck ring		PTFE								
59	Base	Stainless steel	1.4301	AISI 304	SCS13	1.4401	AISI 316	SCS14	NA		
		Cast Iron	NA						EN-GJL-200	ASTM 25B	FC200
62	Base plate	Cast Iron	EN-GJL-200	ASTM 25B	FC200	EN-GJL-200	ASTM 25B	FC200	NA		
57	Mechanical seal		Cartridge type SiC/SiC + Viton (Seal code : SQQV)								

ASVM(N,G) 65/80/100/100B

Sectional view and Materials

ASVM(N) 65/80/100/100B

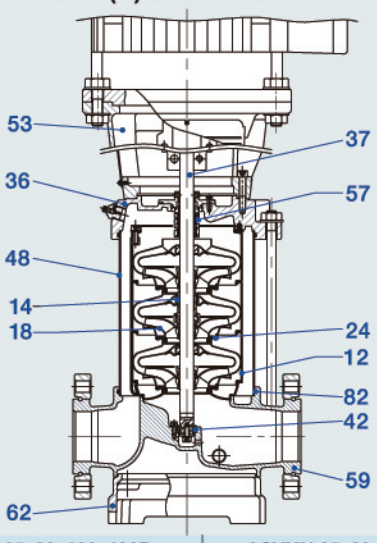

ASVMG 65/80/100/100B

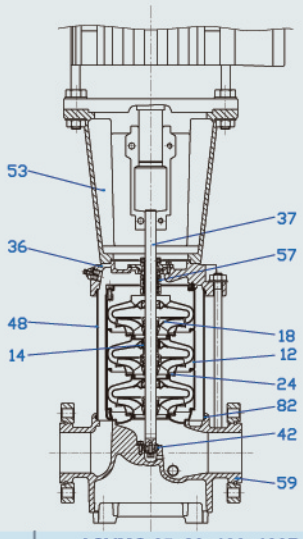

Pos.	Name	Material	ASVM 65, 80, 100, 100B			ASVMN 65, 80, 100, 100B			ASVMG 65, 80, 100, 100B		
			Standard			Standard			Standard		
			Europe	USA	JIS	Europe	USA	JIS	Europe	USA	JIS
36	Pump head	Stainless steel	1.4301	AISI 304	SCS13	1.4401	AISI 316	SCS14	NA		
		Cast Iron	NA						EN-GJL-250	ASTM 35B	FC250
53	Motor Bracket	Cast Iron	EN-GJL-250	ASTM 35B	FC250	EN-GJL-250	ASTM 35B	FC250	EN-GJL-250	ASTM 35B	FC250
18	Impeller	Stainless steel	1.4301	AISI 304	SUS304	1.4401	AISI 316	SUS316	1.4301	AISI 304	SUS304
37	Shaft	Stainless steel	1.4057	AISI 431	SUS431	1.4401	AISI 316	SUS316	1.4057	AISI 431	SUS431
48	Outer Sleeve	Stainless steel	1.4301	AISI 304	SUS304	1.4401	AISI 316	SUS316	1.4301	AISI 304	SUS304
82	O-ring for outer sleeve		EPDM								
12	Chamber	Stainless steel	1.4301	AISI 304	SUS304	1.4401	AISI 316	SUS316	1.4301	AISI 304	SUS304
24	Neck ring		Carbon Fiber + POB + PTFE								
59	Base	Stainless steel	1.4301	AISI 304	SCS13	1.4401	AISI 316	SCS14	NA		
		Cast Iron	NA						EN-GJL-250	ASTM 35B	FC250
62	Base plate	Cast Iron	EN-GJL-250	ASTM 35B	FC250	EN-GJL-250	ASTM 35B	FC250	NA		
57	Mechanical seal		Cartridge type SiC/SiC + Viton (Seal code : SQQV)								
14	Bearing ring		Bronze			POB+Graphite+PTFE			Bronze		
42	Bottom bearing ring		Tungsten carbide / Tungsten carbide								

ASVM(N,G) 125/125B

Sectional view and Materials

ASVM(N) 125/ 125B

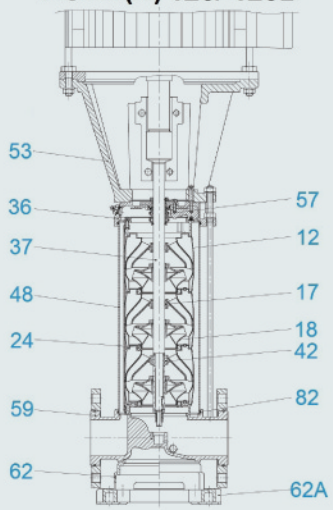

ASVMG 125/ 125B

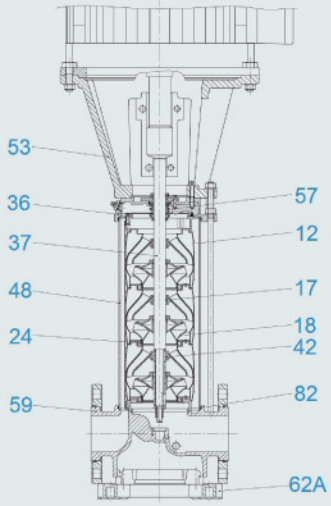

Pos.	Name	Material	ASVM 125, 125B			ASVMN 125, 125B			ASVMG 125, 125B		
			Standard			Standard			Standard		
			Europe	USA	JIS	Europe	USA	JIS	Europe	USA	JIS
36	Pump head	Stainless steel	1.4301	AISI 304	SCS13	1.4401	AISI 316	SCS14	NA		
		Cast Iron	NA						EN-GJL-250	ASTM 35B	FC250
53	Motor Bracket(11kW ~ 45kW)	Cast Iron	EN-GJL-250	ASTM 35B	FC250	EN-GJL-250	ASTM 35B	FC250	EN-GJL-250	ASTM 35B	FC250
	Motor Bracket(55kW ~ 75kW)	Cast Iron	EN-GJS-450-10	ASTM 65-45-12	FCD450	EN-GJS-450-10	ASTM 65-45-12	FCD450	EN-GJS-450-10	ASTM 65-45-12	FCD450
17	Bearing ring		PTFE								
18	Impeller	Stainless steel	1.4301	AISI 304	SUS304	1.4401	AISI 316	SUS316	1.4301	AISI 304	SUS304
37	Shaft	Stainless steel	1.4057	AISI 431	SUS431	1.4401	AISI 316	SUS316	1.4057	AISI 431	SUS431
48	Outer Sleeve	Stainless steel	1.4301	AISI 304	SUS304	1.4401	AISI 316	SUS316	1.4301	AISI 304	SUS304
82	O-ring for outer sleeve		EPDM								
12	Chamber	Stainless steel	1.4301	AISI 304	SUS304	1.4401	AISI 316	SUS316	1.4301	AISI 304	SUS304
24	Neck ring		PTFE								
59	Base	Stainless steel	1.4301	AISI 304	SCS13	1.4401	AISI 316	SCS14	NA		
		Cast Iron	NA						EN-GJL-250	ASTM 35B	FC250
62	Base plate	Cast Iron	EN-GJS-450-10	ASTM 65-45-12	FCD450	EN-GJS-450-10	ASTM 65-45-12	FCD450	NA		
62A	Base plate	Cast Iron	EN-GJS-450-10	ASTM 65-45-12	FCD450	EN-GJS-450-10	ASTM 65-45-12	FCD450	EN-GJS-450-10	ASTM 65-45-12	FCD450
57	Mechanical seal		Cartridge type SiC/SiC + Viton (Seal code : SQQV)								
42	Bottom bearing ring		SiC / SiC								

■ Motor

Motor Type					Nominal current in [A]			
HP	KW	Pole	Flange	Frame	3~220 V	3~240 V	3~380 V	3~415 V
0.5	0.37	2	B14	71A	1.8	1.9	1.0	1.1
0.75	0.55			71B	2.6	2.7	1.5	1.6
1.0	0.75			80A	3.4	3.6	2.0	2.1
1.5	1.1			80B	5.1	5.2	2.9	3.0
2.0	1.5			90S	6.5	6.8	3.7	3.9
3.0	2.2			90L	9.2	9.3	5.3	5.4
4.0	3.0			100L	12.1	12.5	7.0	7.2
5.5	4.0			112M	14.9	15.0	8.6	8.7
7.5	5.5		B5		3~380 V	3~415 V	3~660 V	3~690 V
				132S	11.9	11.4	6.9	6.6
10	7.5			132S	16.7	16.8	9.4	9.7
15	11			160M	22.6	20.7	13.0	12.4
20	15			160M	28.8	26.3	17.8	15.8
25	18.5			160L	37.5	34.3	21.6	20.6
30	22			180M	43.6	39.9	25.1	23.9
40	30			200L	62.0	56.8	35.7	30.5
50	37			200L	73.2	67.0	42.2	37.3
60	45			225M	82.4	75.4	47.4	45.3
75	55			250M	114.0	92.6	58.2	55.6
100	75			280S	134.0	123.0	77.2	73.8

Nominal current is for reference only

Motor Type					Mounting Dimension [mm]							
HP	KW	Pole	Flange	Frame	Fig	D	E	M	N	P	S	T
0.5	0.37	2	B14	71A	1	$14^{+0.008}_{-0.003}$	30	85	70	105	4-M6	2.5
0.75	0.55			71B	1	$14^{+0.008}_{-0.003}$	30	85	70	105	4-M6	2.5
1.0	0.75			80A	1	$19^{+0.009}_{-0.004}$	40	100	80	119	4-M6	3.0
1.5	1.1			80B	1	$19^{+0.009}_{-0.004}$	40	100	80	119	4-M6	3.0
2.0	1.5			90S	1	$24^{+0.009}_{-0.004}$	50	115	95	140	4-M8	3.0
3.0	2.2			90L	1	$24^{+0.009}_{-0.004}$	50	115	95	140	4-M8	3.0
4.0	3.0			100L	1	$28^{+0.009}_{-0.004}$	60	130	110	160	4-M8	3.5
5.5	4.0			112M	1	$28^{+0.009}_{-0.004}$	60	130	110	160	4-M8	3.5
7.5	5.5		B5	132S	2	$38^{+0.018}_{+0.002}$	80	265	230	300	4-Φ14.5	4.0
10	7.5			132S	2	$38^{+0.018}_{+0.002}$	80	265	230	300	4-Φ14.5	4.0
15	11			160M	2	$42^{+0.018}_{+0.002}$	110	300	250	350	8-Φ18.5	5.0
20	15			160M	2	$42^{+0.018}_{+0.002}$	110	300	250	350	8-Φ18.5	5.0
25	18.5			160L	2	$42^{+0.018}_{+0.002}$	110	300	250	350	8-Φ18.5	5.0
30	22			180M	2	$48^{+0.018}_{+0.002}$	110	300	250	350	8-Φ18.5	5.0
40	30			200L	2	$55^{+0.030}_{+0.011}$	110	350	300	400	8-Φ18.5	5.0
50	37			200L	2	$55^{+0.030}_{+0.011}$	110	350	300	400	8-Φ18.5	5.0
60	45			225M	2	$55^{+0.030}_{+0.011}$	110	400	350	450	8-Φ18.5	5.0
75	55			250M	2	$60^{+0.030}_{+0.011}$	140	500	450	550	8-Φ18.5	5.0
100	75			280S	2	$65^{+0.030}_{+0.011}$	140	500	450	550	8-Φ18.5	5.0

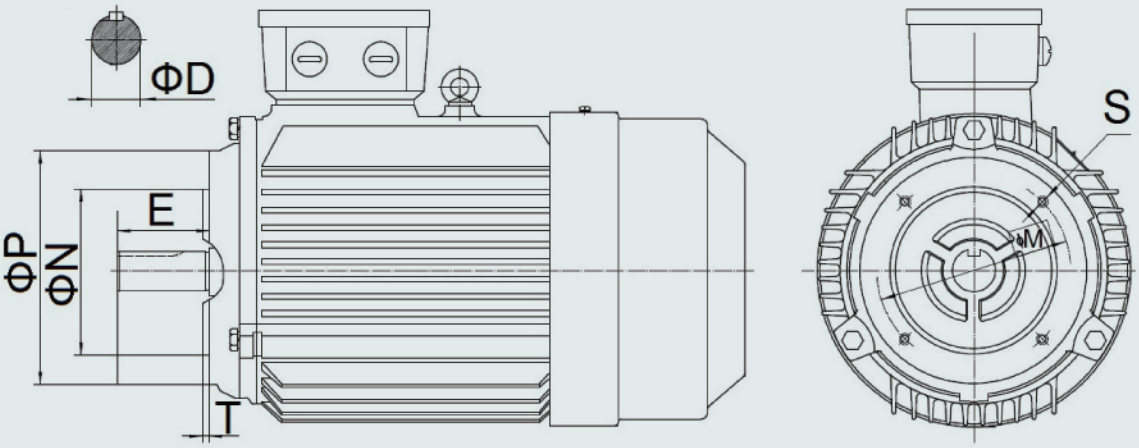

Fig 1

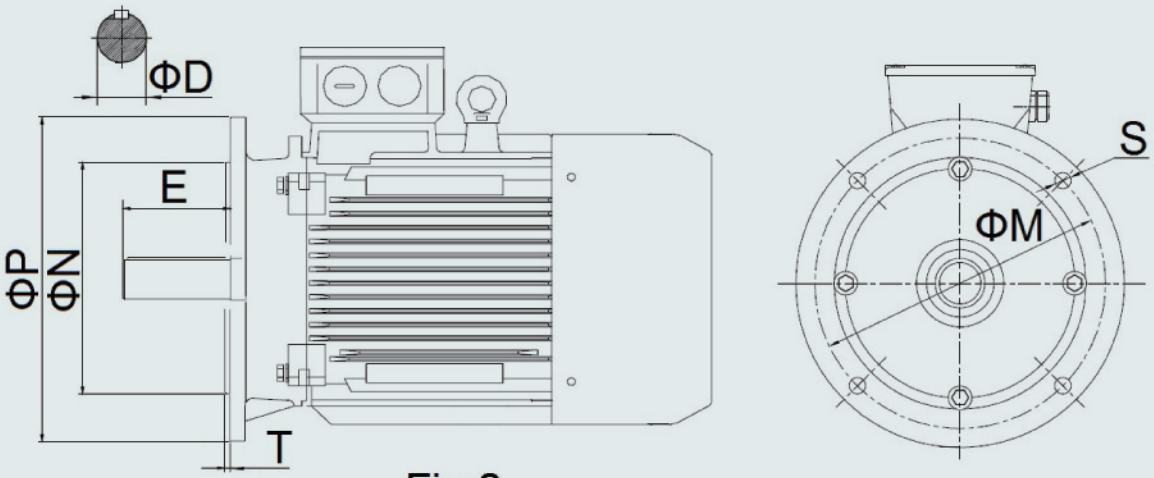

Fig 2

TERAL

Pumps and Fans

In-Line Pumps

Horizontal Centrifugal Pumps

Freshwater & Sewage Submersible Pumps

Water Supply Units

Coolant Pumps

Ring Blowers

Industrial Fans

TERAL ASIA LIMITED

Room 1001, 10/F., Olympia Plaza, 255 King's Road,North Point, Hong Kong Tel: +852-2571-0282 Fax: +852-2571-0619 E-mail: sales@teralasia.com

TERAL THAI CO.,LTD.

TERAL TRADING & SERVICE CO.,LTD.

150 Moo 16 Udomsorayuth Rd., T.Bangkrasan, A.Bangpa-In, Ayutthaya 13160 Thailand Tel.+66-3525-8543 Fax.+66-3525-849

TERAL GENERAL MACHINE (SHANGHAI) CO.,LTD.

No.285, Yuan Qu Road(N), Bei Qiao, Min Hang District, Shanghai 201109, China Tel.+86-21-6490-9128 Fax.+86-21-6490-9126

Affiliated Sister Company: Atai Fuji Motor Co., Ltd. (Ring Blowers & Coolant Pumps)

No.32, Sec2, Chang-Hsing Rd., Lu-Chu Hsiang, Taoyuan Hsien, Taiwan, R.O.C. Tel: +886-3-321-3030 Fax: +886-3-321-7890

TERAL MALAYSIA SDN BHD

L-1-1, Block L, No.2 Jalan PJU 1A/41B, Pusat Dagangan NZX, Ara Jaya, 47301 Petaling Jaya, Selangor D.E., Malaysia

Tel: +60-3-7885-8305 Fax: +60-3-7887-3305 E-mail: sales.my@teralasia.com

TERAL INC.

Head Office.230, Moriwaki, Miyuki-cho, Fukuyama-city, Hiroshima, 720-0003, Japan Tel.+81-84-955-1111 Fax.+81-84-955-5777

Tokyo Office.TERAL Koraku Bldg., 2-3-27, Koraku, Bunkyo-ku, Tokyo, 112-0004, Japan Tel.+81-3-3818-6890 Fax.+81-3-3818-6790

(Edition Date April 2014 by Teral Asia Limited)

www.teral.net